Menu Save Reset Cancel Help

Record Detail * *(This section is required.)*

Permit Type	Permit Number	Opened Date
Building/Residential/Misc/Porch	B26000484	02/18/2026

Description of Work

SFD/ CONSTRUCT NEW 12'X14' SCREENED PORCH ON EXISTING DECK. CONSTRUCT 7'5"X10" EXTENSION ON EXISTING DECK W/ STEPS TO GRADE. CONSTRUCT APPROX. 6'X24' EXTENSION TO EXISTING DECK W/ STEPS TO GRADE. CONSTRUCT NEW 19'5"X10' OPEN DECK ABOVE EXISTING DECK AND NEW EXTENSION W/ STEPS TO DECK EXTENSION BELOW, SPIRAL STAIRS AND GLASS RAILINGS.**MECHANICAL FASTNERS REQUIRED UNDER SPIRAL STAIR BLOCKING, GLASS RAIL SHALL BE IN ACCORDANCE WITH IRC R-324.3 (HUMAN IMPACT LOAD) -SUBJECT TO FIELD INSPECTION**

check spelling

Online BP. gl 2/19/26

Address * *(This section is required.)*

Search Reset Clear Get Parcel & Owner

Street #	Street Name	Street Type
12871	HIGHLAND	RD

Unit Type	Unit #	X Coordinate	Y Coordinate
--Select--		-76.96008	39.18099

City	State	Zip Code	Primary
HIGHLAND	MD	20777	Yes

Parcel * *(This section is required.)*

Search Reset Clear Get Address & Owner

GIS ID *	Parcel	Parcel Area	Land Value	Improved Value	Exemption Value	Plan Area
851121	47	9.41	488500	748700	260200	RURAL

Legal Description

IMPS9.418 A[ ]12871 HIGHLAND RD[ ]HIGHLAND

check spelling

Block	Lot	Census Tract	Council Dist	Inspection Dist	Supervisor Dist	Map #	DAP Zone
		605101	5				

Plan Area	State Tax Id	Subdivision Name
	1405344077	

Section	Area	Tax Map
		40

Grid	Zoning District	ADC Map
40-4	RR-DEO	5051-G2

SDP No.	Final Plan No.	WP File No.

Record Plat No.	WS Contract No.	FDP No.	Primary
			Yes

Owner Occupied	Year Built	Historic District
○ Yes ○ No	1948	○ Yes ◉ No

Historic District Registry No.	Stat Area	Flood Plain
	5-04A	○ Yes ◉ No

Building No

Approved Septic System Plan
Howard County Health Department
D Bernard 3-2-26
Signature Date

* Must Remain 5 feet away from septic Approved as shown
Supplies for construction area.
Cannot be stored on septic area

Owner * *(This section is required.)*

Search Reset Clear

Name *
BRIAN

Address Line 1
12871 Highland Road
Address Line 2

Address Line 3

Mail City
Highland
Mail State
MD
Mail Zip Code
20777
Phone
301-370-5432
Primary
Yes
E-mail

Cell Number **Fax Number**

Professionals *(This section is not required.)*

License # *
08010020247
License Type *
MHIC Ind
Primary
Yes
Business Name
PRO BUILT CONSTRUCTION
First Name **Middle Name** **Last Name**
EDWARD PACYLOWSKI
Address Line 1
13330 CLARKSVILLE PIKE
Address Line 2

City **State** **ZIP Code**
HIGHLAND MD 20777-9701
Phone 1 **Phone 2** **Fax**
3018540821 3018549632
E-mail
JESSICA@PROBUILTCONSTRUCTION.COM

Applicant *(This section is not required.)*

Search **As Owner** **As Lic. Prof** **As Contact**

Type *
Applicant
Relationship
Applicant
Primary
Yes
First Name **MI** **Last Name**
EDWARD J PACYLOWSKI
Full Name
EDWARD J PACYLOWSKI
Organization Name
PROBUILT CONSTRUCTION, INC.
Street Address
13330 CLARKSVILLE PIKE
Address Line 2

City **State** **Zip Code**
HIGHLAND MD 20777
Phone **Cell** **Fax**
301-854-0821 301-854-9632
E-mail *
office@probuiltconstruction.com

Addtl Info

Est Construction Cost * **Housing Units** * **Number of Buildings** * **Public Owned**
50000 0 0 No
Construction Type
434 - Additions, Alterations and Conversions - Residential

PORCH INFORMATION

PORCH INFORMATION

Capital Project-No Fee * ○ Yes ◉ No

Capital Project Number (Text)

Fee Exempt * ○ Yes ◉ No

Roadside Tree Project Permit * ○ Yes ◉ No

Roadside Tree Project Permit # (Text)

Existing Use * SFD

Type of Porch * Screened Porch

Type of Porch Foundation * Existing Deck

Total Square Footage * 168 SQFT (Number)

Water Supply Private

Sewage Disposal Private

Expiration Date 8/18/2026

Submit **Cancel**

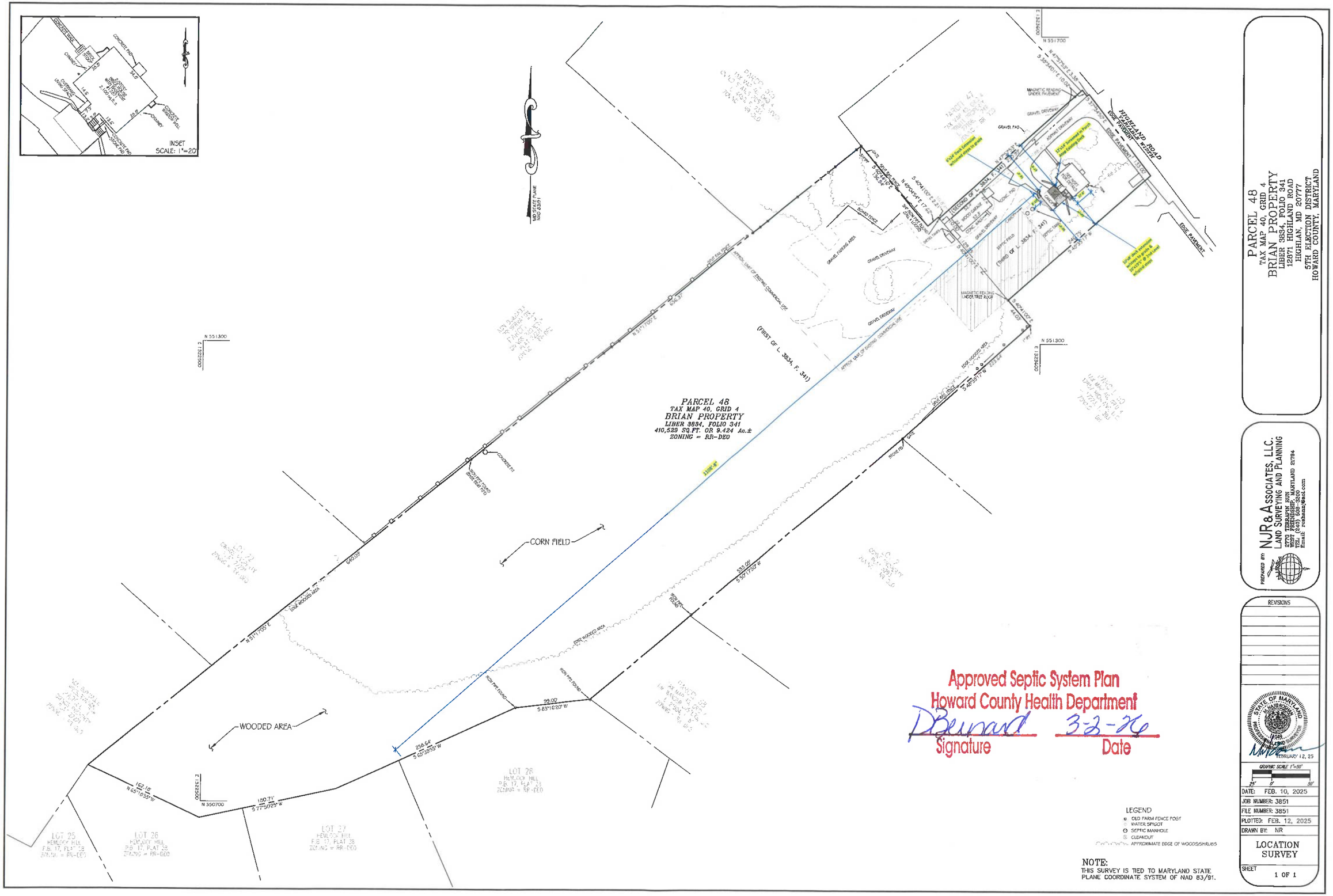

Approved Septic System Plan
Howard County Health Department
DBernard 3-2-26
Signature Date

PARCEL 48
TAX MAP 40, GRID 4
BRIAN PROPERTY
LIBER 3834, FOLIO 341
12871 HIGHLAND ROAD
HIGHLAN, MD 20777
5TH ELECTION DISTRICT
HOWARD COUNTY, MARYLAND

PREPARED BY: NJR & ASSOCIATES, LLC.
LAND SURVEYING AND PLANNING
2770 TERRAPIN RUN
WEST FRIENDSHIP, MARYLAND 21794
TEL: (240) 508-3200
Email: roshann@aol.com

REVISIONS

STATE OF MARYLAND
NAVAL ROSHANN
PROFESSIONAL LAND SURVEYOR
FEBRUARY 12, 25

GRAPHIC SCALE 1"=50'
25' 0' 50'

DATE: FEB. 10, 2025
JOB NUMBER: 3851
FILE NUMBER: 3851
PLOTTED: FEB. 12, 2025
DRAWN BY: NR

LOCATION SURVEY

SHEET 1 OF 1

ProBuilt Construction, Inc.
13330 Clarksville Pike
Highland, MD 20777
(301) 854-0821

Sales Consultant

Ed Pacylowski

Design Consultant

Christina Speiden

Project Manager

Ryan Speiden

Date of Drawing

February 18, 2026

Drawing Title

Brian Deck and Porch Footing Plan

Drawing Scale

3/16" = 1'0"

Project Information

Brian Residence
12871 Highland Road
Highland, MD 20777

Renderings, drawings, samples and other intellectual properties provided by ProBuilt Construction to the client above are for the express benefit of the client. Note that ProBuilt Construction has SOLE OWNERSHIP of all documents. Client can never own, use and/or distrubute documents without written consent of ProBuilt Construction.

If client uses and/or distributes any 3D renderings, 2D drawings, and/or any other intellectually properties provided by ProBuilt Construction to a third party, an invoice of $1,500 will be immediately sent to the client to cover the cost of the intellectual property used without permission of ProBuilt Construction and must be paid.

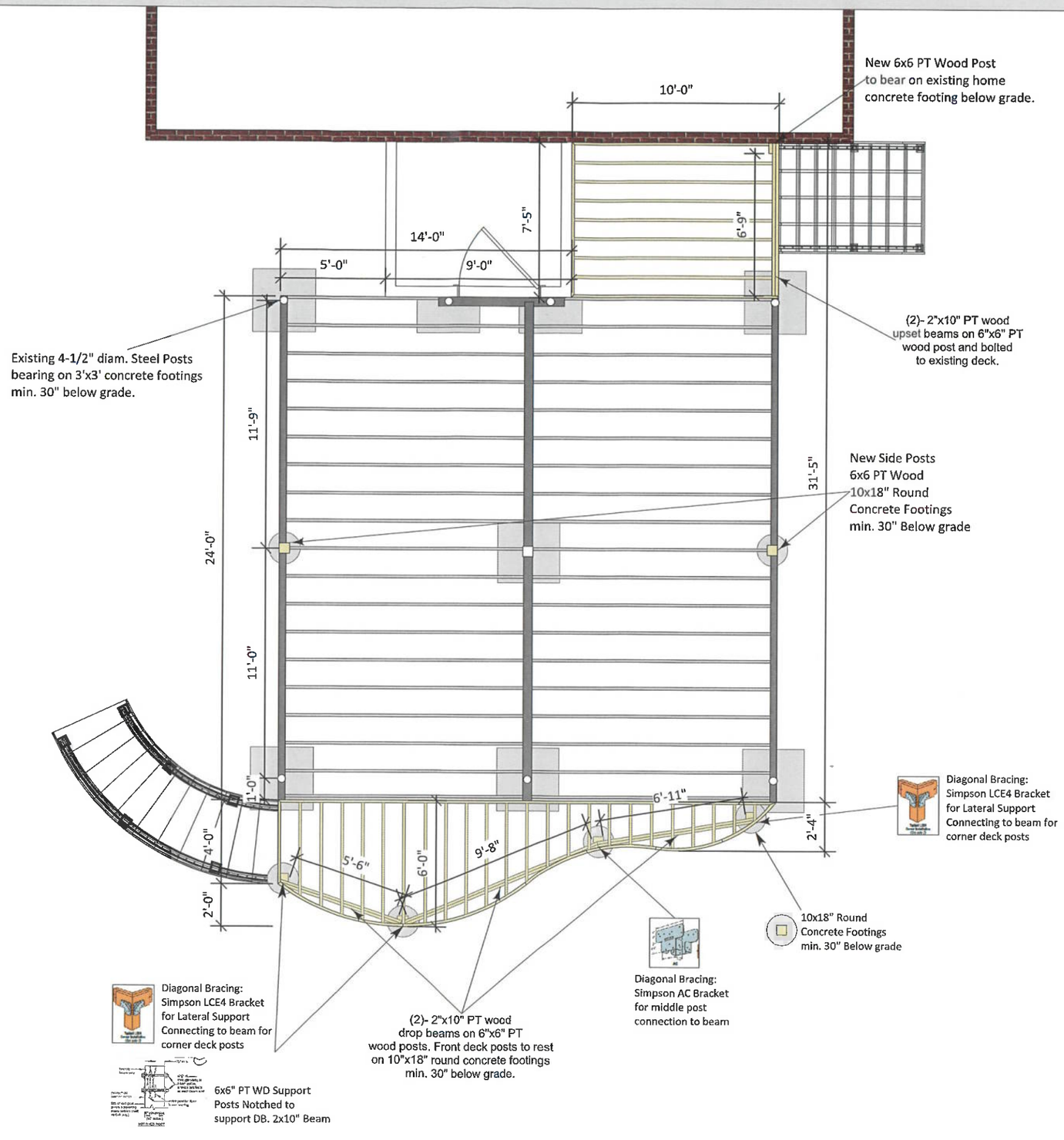

PROBUILT CONSTRUCTION, INC.

ProBuilt Construction, Inc.
13330 Clarksville Pike
Highland, MD 20777
(301) 854-0821

Sales Consultant

Ed Pacylowski

Design Consultant

Christina Speiden

Project Manager

Ryan Speiden

Date of Drawing

February 18, 2026

Drawing Title

Brian Deck and Porch
Main Level Framing Plan

Drawing Scale

3/16" = 1'0"

Project Information

Brian Residence
12871 Highland Road
Highland, MD 20777

Renderings, drawings, samples and other intellectual properties provided by ProBuilt Construction to the client above are for the express benefit of the client. Note that ProBuilt Construction has SOLE OWNERSHIP of all documents. Client can never own, use and/or distrubute documents without written consent of ProBuilt Construction.

If client uses and/or distributes any 3D renderings, 2D drawings, and/or any other intellectually properties provided by ProBuilt Construction to a third party, an invoice of $1,500 will be immediately sent to the client to cover the cost of the intellectual property used without permission of ProBuilt Construction and must be paid.

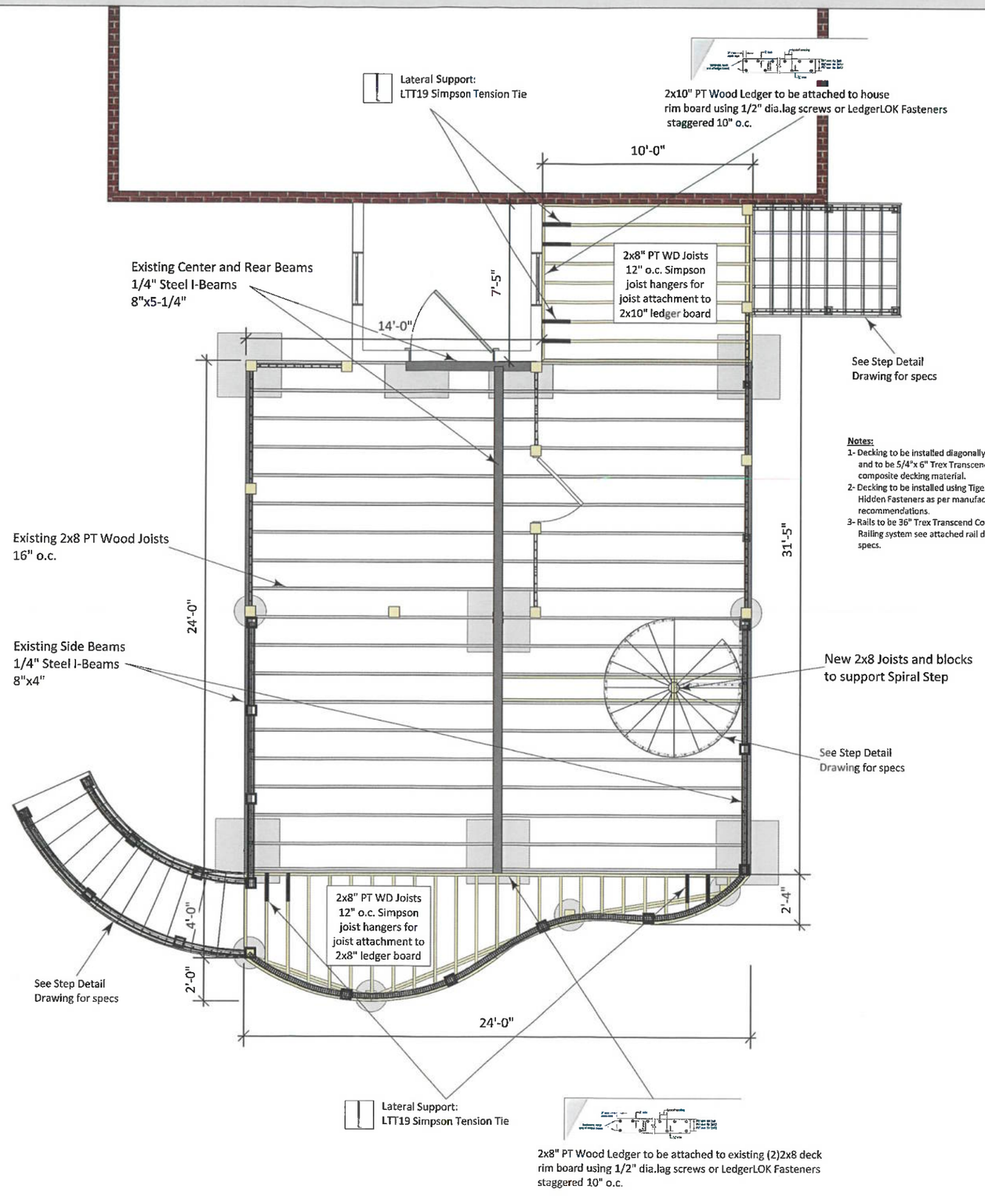

Notes:

1- Decking to be installed diagonally and to be 5/4"x 6" Trex Transcend composite decking material.
2- Decking to be installed using Tiger Claw Hidden Fasteners as per manufacturers recommendations.
3- Rails to be 36" Trex Transcend Composite Railing system see attached rail detail for specs.

ProBuilt Construction, Inc.
13330 Clarksville Pike
Highland, MD 20777
(301) 854-0821

Sales Consultant

Ed Pacylowski

Design Consultant

Christina Speiden

Project Manager

Ryan Speiden

Date of Drawing

February 18, 2026

Drawing Title

Brian Deck and Porch
2nd Level Framing Plan

Drawing Scale

3/16" = 1'0"

Project Information

Brian Residence
12871 Highland Road
Highland, MD 20777

Renderings, drawings, samples and other intellectual properties provided by ProBuilt Construction to the client above are for the express benefit of the client. Note that ProBuilt Construction has SOLE OWNERSHIP of all documents. Client can never own, use and/or distrubute documents without written consent of ProBuilt Construction.

If client uses and/or distributes any 3D renderings, 2D drawings, and/or any other intellectually properties provided by ProBuilt Construction to a third party, an invoice of $1,500 will be immediately sent to the client to cover the cost of the intellectual property used without permission of ProBuilt Construction and must be paid.

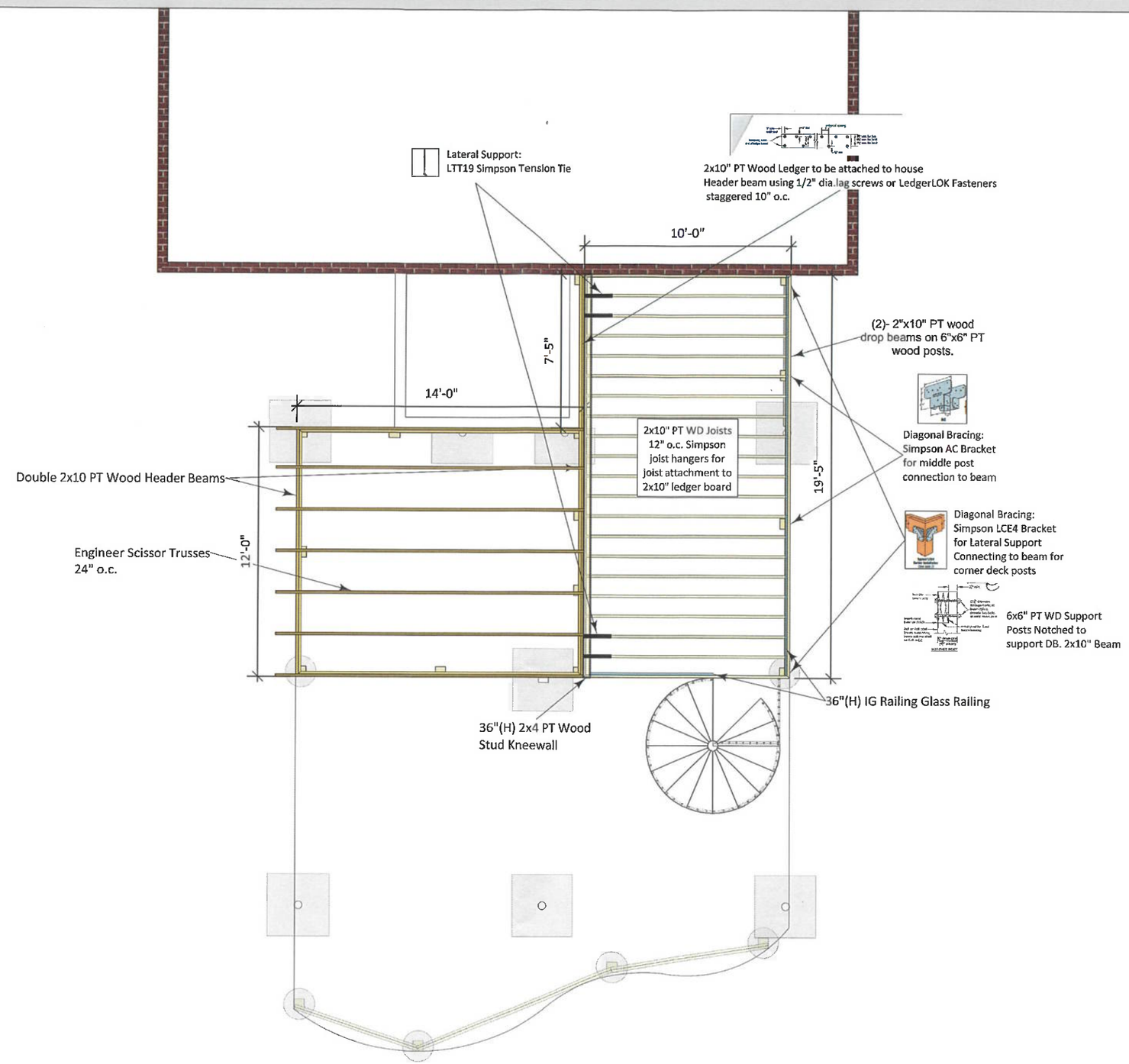

ProBuilt Construction, Inc.
13330 Clarksville Pike
Highland, MD 20777
(301) 854-0821

Sales Consultant

Ed Pacylowski

Design Consultant

Christina Speiden

Project Manager

Ryan Speiden

Date of Drawing

February 18, 2026

Drawing Title

Brian Deck and Porch
Rear Elevation

Drawing Scale

3/16" = 1'0"

Project Information

Brian Residence
12871 Highland Road
Highland, MD 20777

Renderings, drawings, samples and other intellectual properties provided by ProBuilt Construction to the client above are for the express benefit of the client. Note that ProBuilt Construction has SOLE OWNERSHIP of all documents. Client can never own, use and/or distrubute documents without written consent of ProBuilt Construction.

If client uses and/or distributes any 3D renderings, 2D drawings, and/or any other intellectually properties provided by ProBuilt Construction to a third party, an invoice of $1,500 will be immediately sent to the client to cover the cost of the intellectual property used without permission of ProBuilt Construction and must be paid.

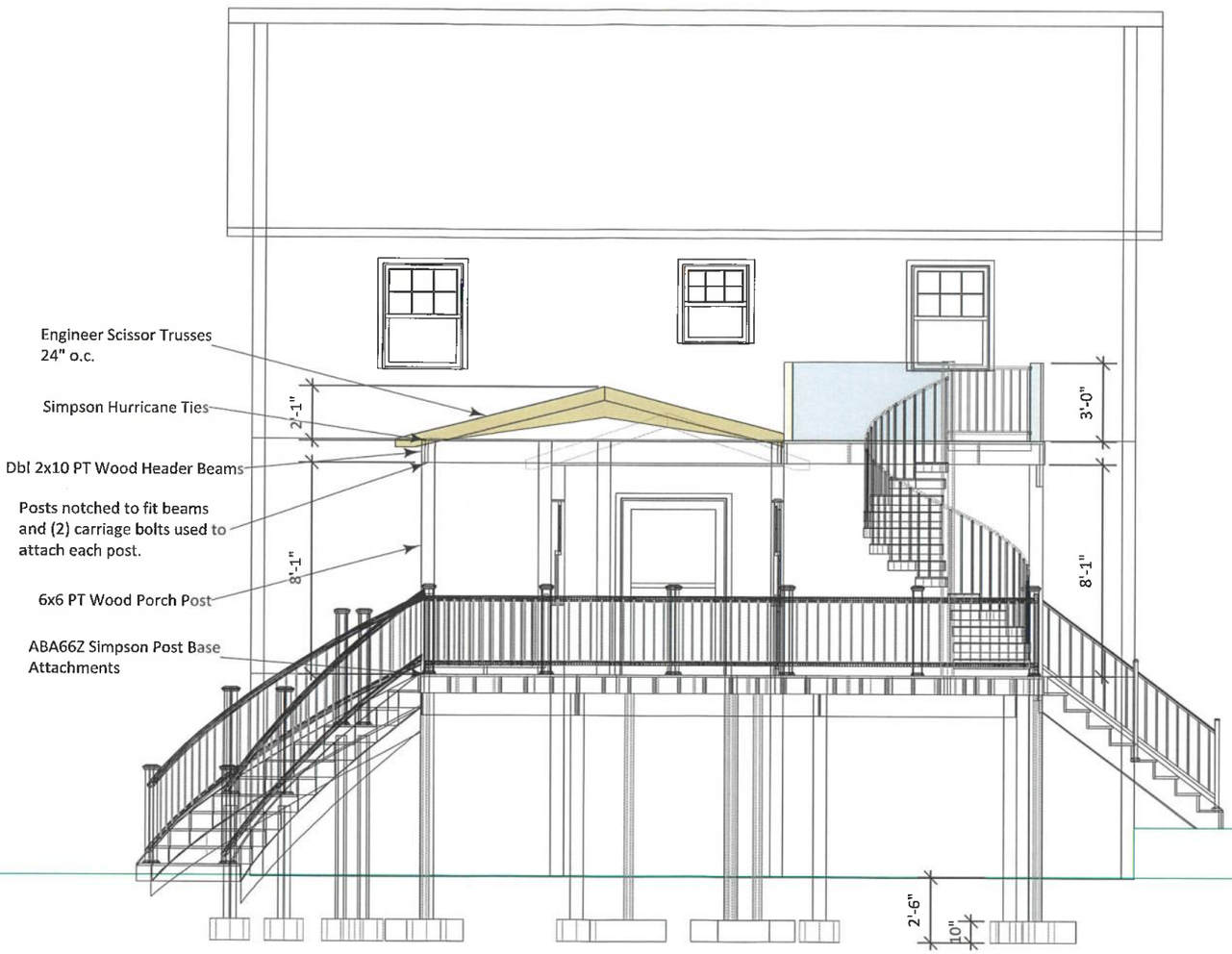

ProBuilt Construction, Inc.
13330 Clarksville Pike
Highland, MD 20777
(301) 854-0821

Sales Consultant

Ed Pacylowski

Design Consultant

Christina Speiden

Project Manager

Ryan Speiden

Date of Drawing

February 18, 2026

Drawing Title

Brian Deck and Porch
Side Elevation

Drawing Scale

3/16" = 1'0"

Project Information

Brian Residence
12871 Highland Road
Highland, MD 20777

Renderings, drawings, samples and other intellectual properties provided by ProBuilt Construction to the client above are for the express benefit of the client. Note that ProBuilt Construction has SOLE OWNERSHIP of all documents. Client can never own, use and/or distrubute documents without written consent of ProBuilt Construction.

If client uses and/or distributes any 3D renderings, 2D drawings, and/or any other intellectually properties provided by ProBuilt Construction to a third party, an invoice of $1,500 will be immediately sent to the client to cover the cost of the intellectual property used without permission of ProBuilt Construction and must be paid.

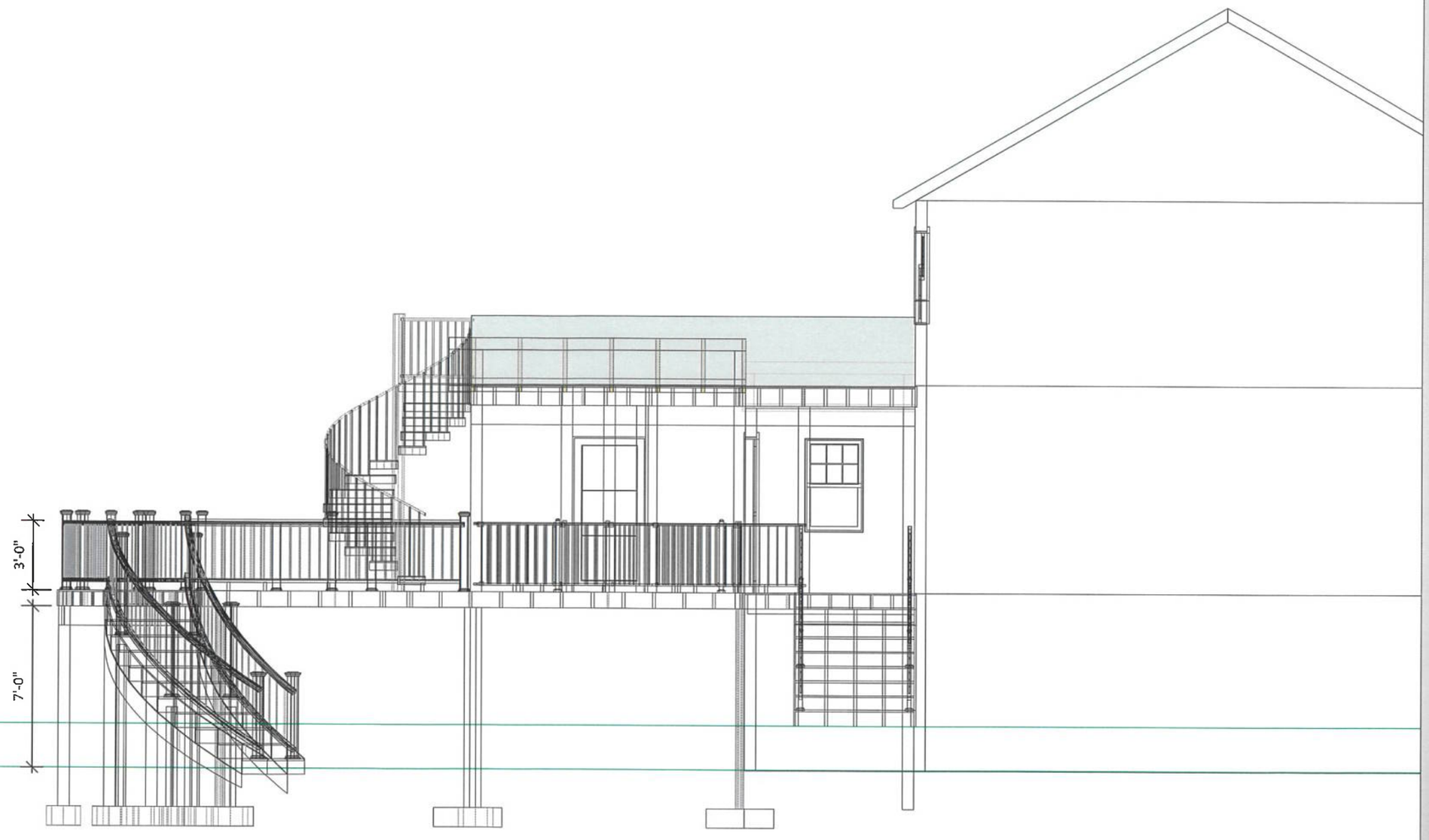

PROBUILT CONSTRUCTION, INC.

ProBuilt Construction, Inc.
13330 Clarksville Pike
Highland, MD 20777
(301) 854-0821

Sales Consultant

Design Consultant

Project Manager

Date of Drawing

Drawing Title

Curved Step Detail

Drawing Scale

1/4" = 1'0"

Project Information

Renderings, drawings, samples and other intellectual properties provided by ProBuilt Construction, Inc. to the client above are for the express benefit of the client. Note that ProBuilt Construction has SOLE OWNERSHIP of all documents. Client can never own, use and/or distrubute documents without written consent of ProBuilt Construction. If client uses and/or distributes any renderings, drawings, samples and/or any other intellectually properties provided by ProBuilt Construction to a third party, an invoice of $1,500 will be immediately sent to the client to cover the cost of the intellectual property used without permission of ProBuilt Construction, Inc.

Top View

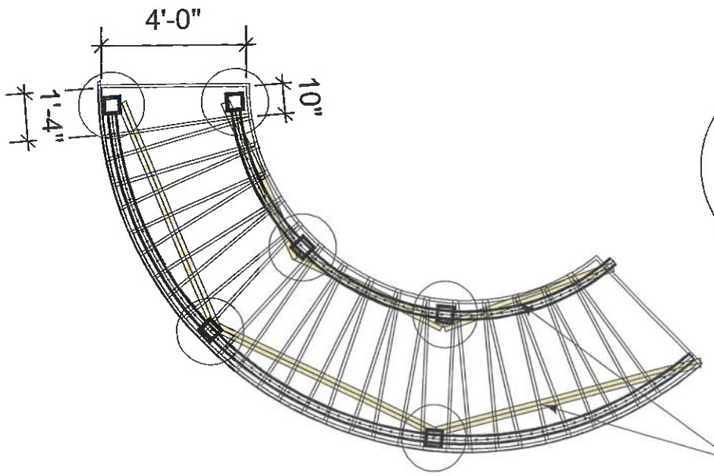

*Stairs trimmed in white vinyl fascia to appear curved from the outside

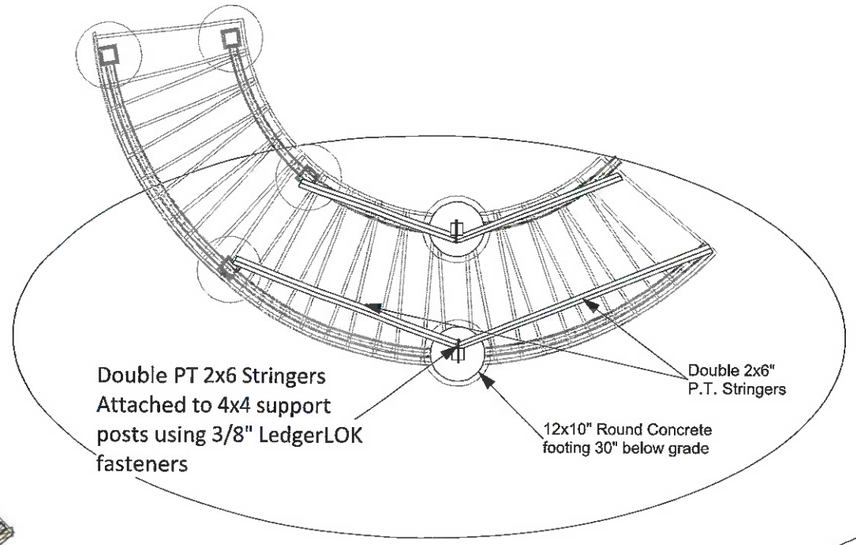

Each box step is attached to the stringers on either side with Simpson H10A-2 Hurricane Ties.

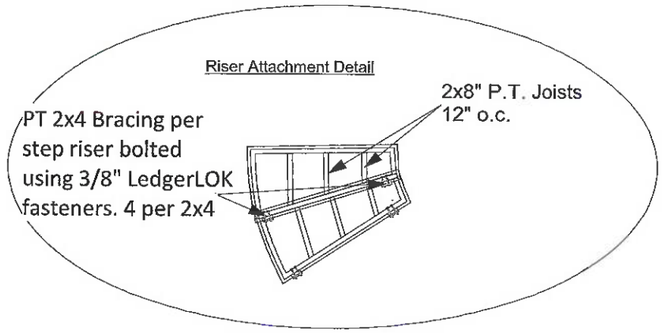

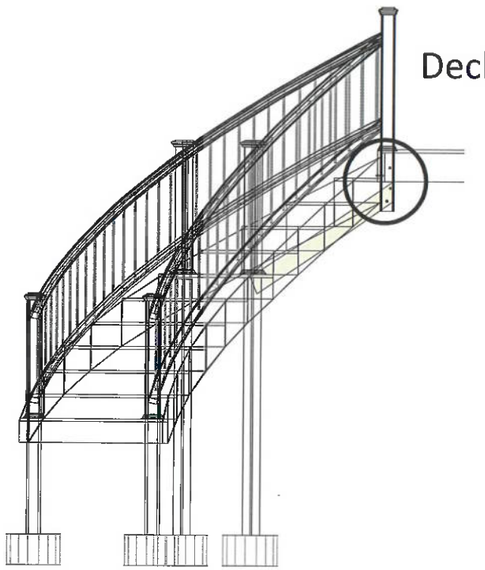

Deck Attachment Detail

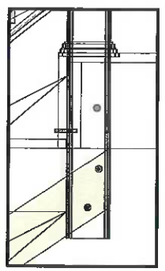

ThruLOK fasteners used to attach riser and post to deck frame

LedgerLOK fasteners used to attach double 2x6" stringers to post

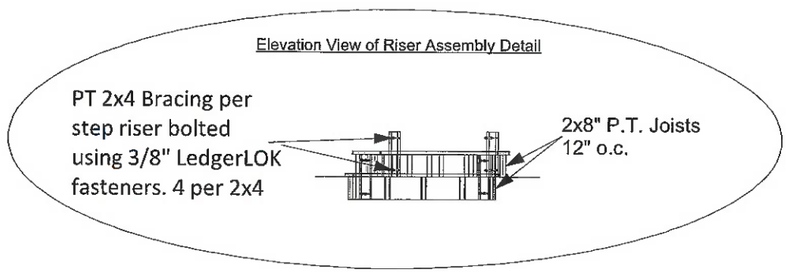

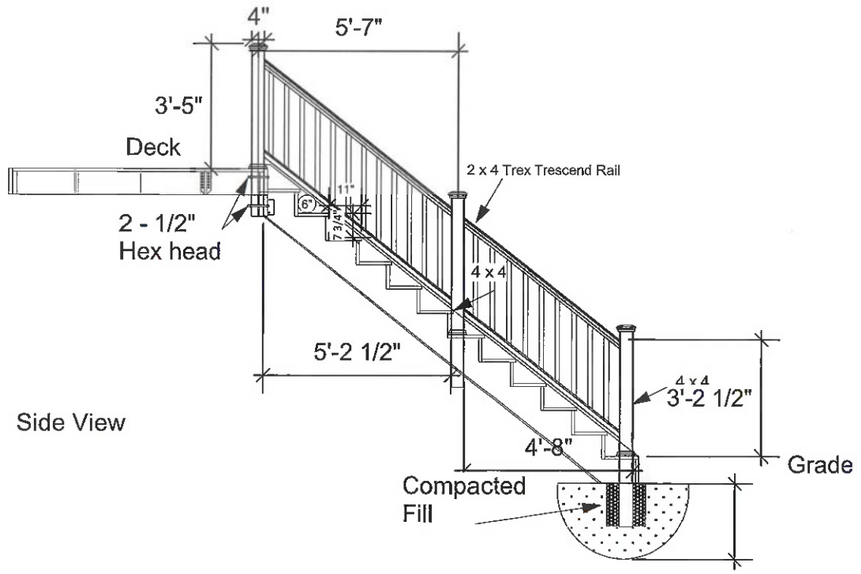

Side View

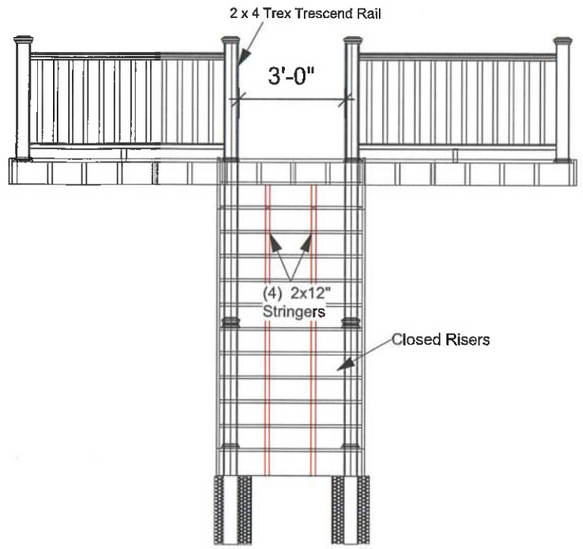

Front View

Renderings, Drawings, Samples and Other Intellectual Properties Provided are for the Express Benefit of the Client. However, ProBuilt Construction, Inc. has Sole ownership of All Documents. Clients can Never Own, Use, and/or Distribute Documents Without Written Concent of ProBuilt Construction, Inc.

PROBUILT CONSTRUCTION, INC.
Trex ProElite™

General Contractor	Project Title	Project Manager	Drawing Title
ProBuilt Construction Inc. 13330 Clarksville Pike Highland, MD 20777	Stair Detail	Ed Pacylowski	Stair Detail
		Date: March 20, 2018	Scale: Scale: 1/4"=1'-0"

VINYL TOP CAP STANDARD
2ND STORY STAIRS WHERE OCCURS
WELDED RAIL GUARD BY IRON SHOP PER 21
PIPE COLUMN PER SCHEDULE, SEE 5
4X OR DBL. 2X FLOOR JOIST OR HEADER TO BE DESIGNED FOR PLATFORM LOAD FOR EACH PROJECT
HANDRAIL, SEE DETAIL 14
SPLICE @ 2ND STORY, SEE DETAIL 10
TOP LANDING 3 OR 4
CLOSED END TREAD OPTIONAL
TYPICAL TREAD, SEE DETAIL 6
PROVIDE CLOSED RISER OR EQUAL TO PREVENT PASSAGE OF 4" ø SPHERE
BEARING PLATE (RECESS OPTIONAL) SEE DETAIL 20 OR 22
PIPE COLUMN PER SCHEDULE SEE 5
* STRUCTURE SHALL BE CAPABLE OF RESISTING 2KIP HIND OR 1KIP SEISMIC LATERAL LOAD IN ADDITION TO 1/2# LATERAL FROM GUARD PER TO UNBALANCED LOADS. (3'12" MIN. LATERAL)
TYPICAL ELEVATION 1
1/2" = 1'-0"
PIPE SLEEVE OVER PIPE COLUMN
RIB STIFFENERS
TYPICAL TREX OVERLAYMENT MOUNTING HOLE (SEE TREAD ALTERNATIVES)
PIPE SLEEVE OVER PIPE COLUMN
1/8" STEEL PLATE OR 3/8" ALUMINUM LANDING (SQUARE OR 30 DEGREE SUPPLIED, OPTIONAL ROUND 45 DEGREE OR 60 DEGREE. SMOOTH OR DIAMOND PLATE AVAILABLE)
(3) 1/2" DIA. x 4" LAG BOLTS (GALV. IV ALUMINUM) TO WOOD HEADER (BY OTHERS) @ 1" FROM ENDS AND EQUALLY SPACED (DOUBLE QUANTITY OF LAGS AT INTERMEDIATE LANDING OF 2 STORY STAIRS). WHERE LANDING IS EXPOSED AT EXTERIOR USE GALV. LAGS. (STAINLESS STEEL REQUIRED WITH ALUMINUM LANDING)
90 DEGREE LANDING PLAN 2
1" = 1'-0"
1/2" MAX. RADIUS
1/8" STEEL OR 3/16" ALUMINUM PLATE LANDING
40 DEGREE BEND
TYPICAL RIB STIFFENER
1/8" V 2'-8"
1/4" AT STEEL 3/8" AT ALUMINUM
LANDING STIFFENER 3
N.T.S.
45° MAX.
RIB STIFFENERS
GUARDRAIL NOT SHOWN FOR CLARITY
(2) 1/2" DIA. x 4" LAG BOLTS, SEE 2
VARIES 15" MINIMUM
60 DEGREE LANDING PLAN 4
1" = 1'-0"
36" MINIMUM CLEAR
"R" - PER SCHEDULE, SEE 5
HANDRAIL
3/4" SQ. x 16 GA. TUBE SPINDLE (TYPICAL), SEE 10
TYP. OVERLAYMENT MOUNTING HOLE
9" TREAD WIDTH
11" PER SCHEDULE
SEE 15 & 16
HOLES FOR SPINDLE SCREW TYPICAL
TYPICAL TREAD
BUILDING
HANDRAIL
UP
LIP DOWN
TREAD PLAN 6
1 1/2" = 1'-0"
TREAD ALTERNATIVES
1. SMOOTH FLOOR PLATE: 1/8" OR 10 GA GALVANIZED STEEL PLATE OR 3/16" POWDER COATED ALUMINUM PLATE.
2. DIAMOND FLOOR PLATE: 1/8" GALVANIZED STEEL OR 3/16" POWDER COATED ALUMINUM 3003-H23 TREAD PLATE (3'-0" MAX. DIA. IV ALUMINUM).
* INCLUDES HOLES FOR MOUNTING TREX OVERLAYMENT (SPECIAL ORDER AVAILBLE WITHOUT HOLES).
TREAD AT COLUMN 6A
N.T.S.
LIP UP, 5" SEE 5
OPTIONAL 3/4" TREX DECKING OVERLAYMENT
SEE 6 FOR TREAD ALTERNATIVES
VARIES 8" MIN. AT COLUMN
TREAD SECTION 7
N.T.S.
15/16" SQUARE HOLE IN TREAD FOR 3/4" TUBE SPINDLE
TYPICAL TREAD
LIP DOWN
SPINDLE
1/4" DIA. M.B. IV STAR WASHER & NUT TYPICAL
TYPICAL TREAD
15/16" SQUARE HOLE IN TREAD FOR 3/4" TUBE SPINDLE
LIP UP
DETAIL 11
1/2" = 1'
1/4" DIA. M.B.
3/4" SQ. x 14 GA. TUBE STARTER POST (Fy = 30 K.S.I.)
3" 1/2" DIA. x 1/8" PLATE SEE DETAIL 13
1/8"
DETAIL 12
N.T.S.
C.L. OF 1/4" DIA. M.B. (BEYOND)
3/4" x 16 GA. TUBE SPINDLE (BEYOND)
TYPICAL TREAD
LIP UP
LIP DOWN
6A
7
11 & 17
C.L.P.
1/2" MIN.
(2) 12-24 x 1 1/2" S.D.S. T.S.H.S. TEKS (SER...) SCREWS MAY BE INSTALLED IN HOLES FOR SET SCREWS. WHERE PIPE SLEEVE COLLARS BEAR ONE ON TOP OF ANOTHER, TEK SCREWS ARE NOT REQ'D.
PIPE SLEEVE COLLAR, SEE 14
(PIPE SLEEVE COLLAR MAY BE OMITTED WHERE TREAD IS WELDED DIRECTLY TO COLUMN)
END PLATE SAME MATERIAL AS TREAD (OPTIONAL ON 5'-0" MAX. DIA. STAIR)
PIPE COLUMN PER SCHEDULE, SEE 5
TYPICAL TREAD SECTION 9
1 1/2" = 1'-0"
4" O.D. COLUMN
3 1/2" O.D. INNER COLUMN
LANDING PER DETAIL 3 OR 4
TYP. TREAD COLLAR
4" O.D. COLUMN
(4) 3/16" DIA. SET SCREWS @ PLACES) (3 TOTAL) COLUMN TO INNER COLUMN
COLUMN SPLICE @ 2ND STORY 10
N.T.S.
1/4" x 10" DIA. STEEL OR ALUMINUM BEARING PLATE (5/8" x 10" DIA. AT (2) STORY)
3/8"
NOTE: PLEASE CONTACT THE IRON SHOP PRIOR TO SETTING LOCATION FOR ANCHOR BOLTS.
PIPE COLUMN PER SCHEDULE, SEE 5
24" PER SCHEDULE
COLUMN BASE PLAN 15
N.T.S.
5 1/2" OR 4" I.D. PIPE SLEEVE
(4) HOLES TAPPED FOR 3/8" DIA. SCREWS
2" x 1/2"
TYPICAL SLEEVE COLLAR 14
N.T.S.
PIPE COLUMN PER SCHEDULE, SEE 5
1/4" x 10" DIA. BEARING PLATE * AT FLOOR LEVEL OR RECESSED
CONCRETE PAD
NEW OR EXISTING CONCRETE SLAB (BY OTHERS)
* FOR BEARING PLATE ON EXISTING 3 1/2" MIN. SLAB A SOILS SITE SPECIFIC MODIFICATION APPROVAL IS REQUIRED FROM THE L.A. BLDG. DEPT. APPROVAL IS ALSO REQUIRED BY THE ENGINEER OF THE STANDARD PLAN
5" MIN. EDGE DIST.
REBAR FOR EXPANSIVE SOIL
36" SQUARE PAD PER SCHEDULE
SEE 5
NATURAL OR COMPACTED SUB-GRADE
FOR EXPANSIVE SOILS: 18" MIN. DEEP AT INTERIOR, 4 3/4" MIN. DEEP AT EXTERIOR OF BUILDING W/ (2) #4 EACH WAY TOP & BOTTOM IN 3" CLEAR TO SOIL.
COLUMN BASE SECTION 20
BEARING PLATE ANCHORAGE:
(4) 1/2" DIA. x 10" A.B. (GALV. IV ALUMINUM BASE PLATE) FOR EXTERIOR INSTALLATION USE GALV. A.B. (STAINLESS STEEL REQUIRED W/ ALUMINUM PLATE) OR (4) 3/8" DIA. MIN. HILTI KWIK BOLT 3 (K.B3) ANCHORS W/ 3 1/2" MIN. EMBED., (20 FT-LBS. TORQUE) L.A. R.R. 23837, (INSTALL ANCHORS AFTER CONCRETE HAS CURED, 28 DAYS.)
NOTE: KBB ANCHORS INSTALLED IN EXTERIOR LOCATIONS SHALL BE HOT-DIPPED GALVANIZED OR STAINLESS STEEL. (STAINLESS STEEL REQUIRED WITH ALUMINUM PLATE).
NOTE: CONCRETE FLOOR OR WOOD FLOOR FRAMING (EXISTING OR NEW) SHALL BE DESIGNED FOR THE SPECIFIC COLUMN LOAD FOR EACH INSTALLATION. ANY REQUIRED STRUCTURAL CALCULATION OR ENGINEERING SHALL BE PROVIDED BY OWNER.
LIP UP, 5" SEE 5
SEE 6 FOR TREAD ALTERNATIVES
VARIES 8" MIN. AT COLUMN
STAIR SCHEDULE 5
1 1/2" SQ. x 14 GA. (0.083") RIBE TYP. (STEEL OR ALUMINUM)
3'-0" MAX.
3/4" SQ. x 16 GA. (0.065") (STEEL OR ALUMINUM)
CAST ALUMINUM DOME CAP (OPTIONAL)
OPENINGS IN GUARD SHALL NOT ALLOW THE PASSAGE OF A 4" DIAMETER SPHERE
#13-34 x 1 1/2" S.D.S.T.S.H.S. TEKS SCREWS (SER...) (L.A. CITY APPROVED)
(2) 1/2 x 3" HH. WOOD SCREWS 1 1/2" INTO STUD OR BLOCK
1/8" (TYP.)
RAIL CONNECTOR OR WELD
1 1/2" SQ. x 14 GA.
1/4" DIA. M.B.
SIMILAR
TOP LANDING 3 OR 4
LANDING RAIL GUARD 21
CONTINUOUS HANDRAIL SECURED TO EACH SPINDLE, SEE 14
18" MIN. FOR STEEL, 28" MIN. FOR ALUMINUM
SAFETY TERMINAL OPTIONAL SEE NOTE 18
OPENINGS IN GUARD SHALL NOT ALLOW THE PASSAGE OF A 4" DIAMETER SPHERE
3/4" SQ. x 16 GA. (0.060") TUBE SPINDLE (Fy = 50 K.S.I.) STEEL OR 6061-T6 ALUMINUM IV CAST ALUMINUM HEAD (ANSI AA-3M600-F)
3/8" SQ. SOLID INSERT TO 15" ABOVE UPPER TREAD FOR STEEL (Fy = 30 K.S.U. & .25" FOR ALUMINUM
VARIES 37"-38" MIN. @ 42" MAX.
54" MIN. / 58" MAX.
TYPICAL HANDRAIL RAIL GUARD 16
1" = 1'-0"
CONTINUOUS HANDRAIL SEE 14
(1) 1/2 x 3/4" SHEET METAL SCREW
FORCE FIT HEAD INTO SPINDLE
DRIVE PIN
3/4" SQ. x 16 GA. TUBE SPINDLE IV CAST ALUMINUM HEAD (ANSI AA-3M600-F)
3/16" SET SCREW
IN-BETWEEN SPINDLE BASE (T.B.S.)
TYPICAL TREAD
3/16"
5 3/4"
1 1/16"
1/4"-20 FAH HEAD PHILLIPS x 3/4" LONG SCREW
SPINDLE 17
1/2" = 1"
1 1/4" x 1 1/4" x MBA. (0.075") INSERT
1 1/2" x 1/2" x 5" PLATE
1 1/2"
3/4"
1/8"
(2) 1/4" DIA. HOLES AT WOOD CONNECTION (1) 1/4" DIA. HOLE AT STEEL CONNECTION
RAIL CONNECTOR
LANDINGS
TYPICAL FLOOR
1.0"
LAG, SEE PLAN
(2) 2x OR 4x BEAM
FINISH
CONNECTION AT LANDING 8
1 1/2" = 1'-0"
FLOOR PANEL
BLOCK SOLID 12" SQUARE
6x6 T2 D.F.-L.
SIMPSON LCE66
SIMPSON A33 (4) SIDES
COLUMN + BEARING PLATE SEE 15
L.T. WEIGHT CONCRETE WHERE OCCURS
FOOTING FOR SUPPORT OF STAIRS ONLY, SEE 20
OPTIONAL POST HIGH FOOTING WHERE REQUIRED
COLUMN BASE SECTION 22
LANDING
TYPICAL TREAD
RISER
TYP. TREAD
RIB STIFFENER
RIB STIFFENER
LANDING
TYP.