RECEIVED

JUN 29 2021

LICENSES & PERMITS

PERMIT NUMBER: B 21002454 **DATE ACCEPTED:**

RESIDENTIAL BUILDING PERMIT APPLICATION

HOWARD COUNTY DEPARTMENT OF INSPECTIONS, LICENSES, AND PERMITS

3430 COURT HOUSE DRIVE, ELLICOTT CITY, MD 21043 - PHONE: (410) 313-2455 OPTION #4

www.howardcountymd.gov

BUILDING SITE ADDRESS *REQUIRED*

Street Address: 5620 Dosa Court			Unit:
City: Clarksville	State: MD MD		Zip Code:
Subdivision/Village/Complex Name:		SDP/WP/BA #:	
Lot:	Tax Map: 28	Parcel: 15	Grading Permit #:

DESCRIPTION OF WORK *REQUIRED*

Existing Use: SFD	Proposed Use: SFD	Estimated Cost: $ 5000.00

Trade Work to Be Completed *(Separate Permits Required)*: ☐ Mechanical (HVACR) ☐ Electrical ☐ Plumbing ☒ None

Install 1-1000 gallon inground propane storage tank & run line to house.

PROPERTY OWNER INFORMATION *REQUIRED*

Owner(s) Name(s) *(As it appears on tax records)*: Williamsburg Homes		Primary Residence: ☒ Yes ☐ No
Owner's Street Address: 5485 Harpers Farm Rd STE 200		
City: Columbia	State: MD	Zip Code: 21044
Phone: 240-393-2942	Email:	

APPLICANT NAME *REQUIRED - INDIVIDUAL WHO SIGNS THIS APPLICATION*

Business Name: Thompson Gas	Contact Name: Anthony Aurio	
Street Address: 1600 Sparrows Point		
City: Baltimore	State: MD	Zip Code: 21219
Phone: 443-955-5494	Email: Aduro@Thompson995.com	

CONTRACTOR INFORMATION *REQUIRED*

Business Name: Thompson Gas		
Licensee's Name: Randall Thompson	License #: 60003	
Street Address: 5260 Westview Drive STE 200		
City: Frederick	State: MD	Zip Code: 21703
Phone: 443-955-5494	Email: Aduro@Thompson995.com	

ARCHITECT/ENGINEER INFORMATION *INDIVIDUAL WHO SIGNED PLANS, IF APPLICABLE*

Business Name:	Name:	
Street Address:		
City:	State:	Zip Code:
Phone:	Email:	

BUILDING CHARACTERISTICS *REQUIRED*

Primary Structure: ☒ SF Dwelling ☐ SF Townhouse ☐ SF Duplex ☐ Mobile Home ☐ Multi-Family Dwelling (MF*) Condo: ☐ Yes ☒ No

Utilities: ☐ Electric ☐ Gas Water Supply: ☐ Public ☒ Private (Well) Sewage Disposal: ☐ Public ☒ Private (Septic)

Heating System: ☐ Electric ☐ Natural Gas ☐ Propane ☐ Other: Roadside Tree Project: ☒ No ☐ Yes: #

Sprinkler System: ☐ NFPA 13 ☐ NFPA 13R ☐ NFPA 13D ☐ None Fire Alarm System: ☐ Yes ☐ No ☐ Voice Evac

ADDITIONAL RESIDENTIAL INFORMATION *(PLEASE SELECT/COMPLETE ALL THAT APPLY)*

Model Name & Options:

# of Bedrooms (SF):	# of efficiency units (MF*):	# of 1 BR (MF*):	# of 2 BR (MF*):	# of 3 BR (MF*):
# Rooms:	# Full Baths:	# Half Baths:	# Fireplaces:	

Garage/Carport Info: ☐ Attached Garage ☐ Detached Garage ☐ Integral Garage ☐ Carport ☐ None

Basement/Foundation Info: ☐ Slab on Grade ☐ Post & Pier ☐ Unfinished Basement ☐ Finished Basement: ☐ Full or ☐ Partial

1st Fl Width:	1st Fl Depth:	2nd Fl Width:	2nd Fl Depth:	Bsmt Width:	Bsmt Depth:

Energy Method: ☐ Prescriptive ☐ Performance ☐ UA Alternative ☐ ERI Gross Area: sq ft Occupiable Area: sq ft

AGREEMENT/ DISCALIMER *REQUIRED*

THE UNDERSIGNED HEREBY CERTIFIES AND AGREES AS FOLLOWS: (1) THAT HE/SHE IS AUTHORIZED TO MAKE THIS APPLICATION; (2) THAT THE INFORMATION IS CORRECT; (3) THAT HE/SHE WILL COMPLY WITH ALL REGULATIONS OF HOWARD COUNTY WHICH ARE APPLICABLE THERETO; (4) THAT HE/SHE WILL PERFORM NO WORK ON THE ABOVE REFERENCED PROPERTY NOT SPECIFICALLY DESCRIBED IN THIS APPLICATION; (5) THAT HE/SHE GRANTS COUNTY OFFICIALS THE RIGHT TO ENTER ONTO THIS PROPERTY FOR THE PURPOSE OF INSPECTING THE WORK PERMITTED AND POSTING NOTICES.

APPLICANT'S ORIGINAL SIGNATURE — DATE SIGNED: 6/24/21

FOR OFFICE USE ONLY

CHECKS PAYABLE TO: DIRECTOR OF FINANCE OF HOWARD COUNTY

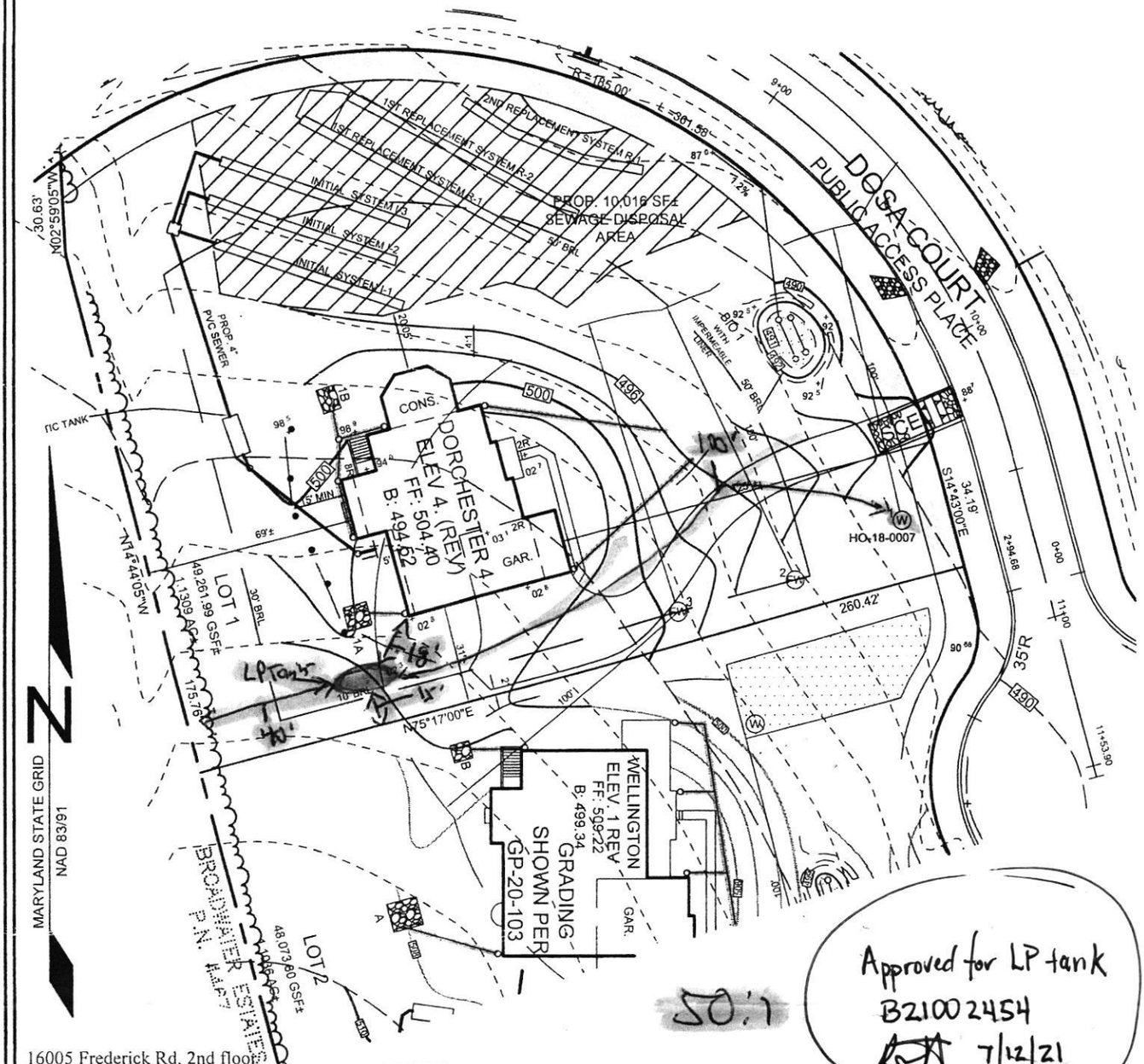
AGENCIES REQUIRED/APPROVALS:

☒ PR	☒ DPZ	☐ DED	☒ Health 7/12/21	☐ SHA	☐ CID

SUBMITTAL FEES: 135.00	PAYMENT:	ACCEPTED BY: Mail

NO CK.

Williamsburg Home



Approved for LP tank
B21002454
7/12/21

50.1

1000 VG

16005 Frederick Rd, 2nd floor
Woodbine, Maryland 21797
Phone: 443.325.5076
Fax: 410.696.2022
Email: info@sillengineering.com
Civil Engineering for Land Development

SILL ENGINEERING GROUP, LLC

DESIGN BY:	PS
DRAWN BY:	JC
CHECKED BY:	PS
SCALE:	1"=50'
DATE:	APRIL 07, 2021
PROJECT #:	20-003
SHEET #:	1 OF 1

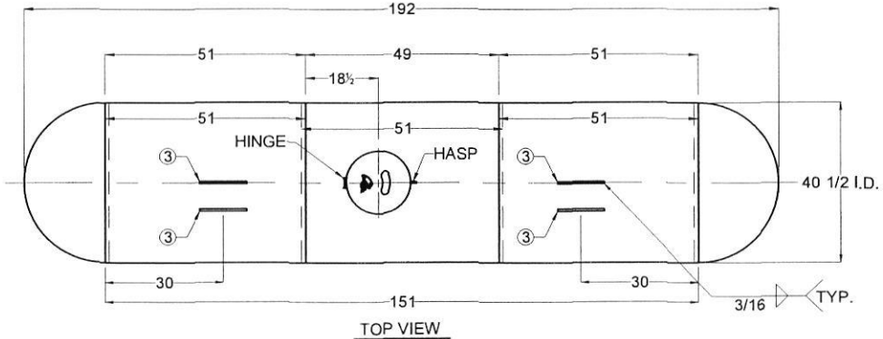
Clarksville

HOUSE RESITE
THE WOODLANDS
LOT 1
5620 DOSA COURT

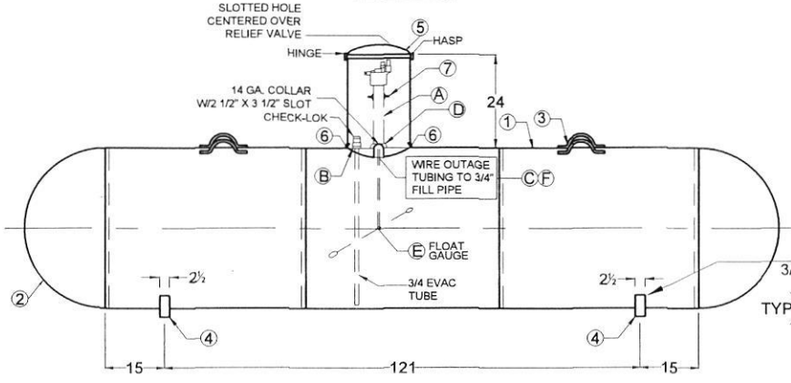
TAX MAP 28 GRID 23
5TH ELECTION DISTRICT

PARCEL 15
HOWARD COUNTY, MARYLAND

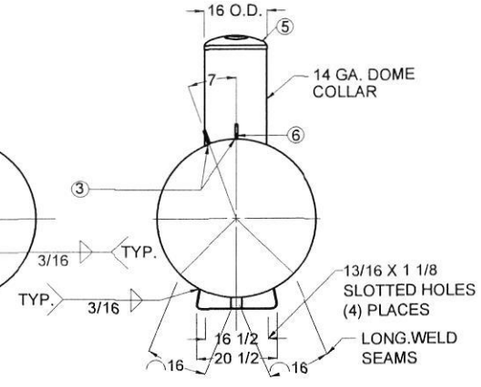
THIS VESSEL IS DESIGNED FOR THE STORAGE
OF LIQUEFIED PETROLEUM GAS ONLY



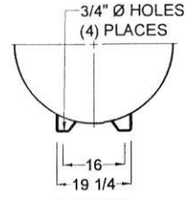
TOP VIEW



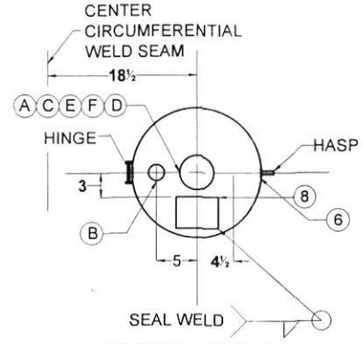
SIDE ELEVATION



END VIEW



OPTIONAL
TWO PIECE LEG



FITTING LAYOUT

TANKS SOLD WITH COMPOSITE
DOME MUST HAVE UL MARK REMOVED
AND DATA REPORT CORRECTED

NB SER. NO. *SY

CERTIFIED BY: AMERICAN WELDING & TANK LLC
FREMONT, OHIO - WEST JORDAN, UTAH

ASME U W. RT4

MAX. ALLOW. WORK. PRESS.	250 PSI	AT	400 °F.
M.D.M.T.	-20 °F.	AT	250 PSI
PLANT NO.	*		
YEAR BUILT	201		
SER. NO.	*SY		
LENGTH	192 IN.	OUTSIDE DIA.	41 IN.
HEAD THK.	.202 IN.	SHELL THK.	.238 IN.
UNDER GROUND TYPE	AWT-UG	SURFACE AREA.	172 SQ. FT.
		HEAD D.R.	HEMI
LISTED CONTAINER ASSEMBLY FOR LP GAS 695A		WATER CAPACITY	1000 GALLONS

THIS CONTAINER SHALL NOT CONTAIN A PRODUCT HAVING A VAPOR PRESURE IN EXCESS OF 215 PSI AT 100°F.
DIP TUBE LENGTH - 89% FULL AT 50°F. D.T.= 8.0 IN.

DATA PLATE DETAIL

GENERAL NOTES:

1. LIFTING LUGS DESIGNED FOR TOTAL LIFTING WEIGHT OF 2700#
2. TOTAL EMPTY WEIGHT IS 1794#
3. ALL DIMENSIONS ARE IN INCHES UNLESS OTHERWISE SPECIFIED.
4. COMPLETE TANK DRIED TO REMOVE ALL MOISTURE.
5. ALL WEIGHTS AND CAPACITIES ARE APPORXIMATE
6. EXTERIOR OF TANK TO BE GRIT BLASTED.
7. PAINT PER SHOP ORDER.
8. VACUUM PURGE TANK.
9. DIMENSIONS ARE SUBJECT TO CHANGE WITH OUT NOTICE. (NON-PRESSURE RETAINING COMPONENTS ONLY)
10. THREADS OF ALL FITTINGS TO BE COATED WITH COMPOUND SUITABLE FOR USE WITH LP GAS.
11. FLOAT GAUGE TO BE INSTALLED WITH FLOAT ARM 45 ° OFF LONGITUDINAL CENTERLINE OF TANK.
12. DOUBLE LIFTING LUGS ON LONG RISER TANKS ONLY

GENERAL SPECIFICATIONS	
WATER CAPACITY (GALLONS)	1000
ALLOWABLE WORKING PRESSURE (PSIG)	250
JOINT EFFICIENCY: ASME UW-51 LONG SEAM	100 %
ASME UW-52 HEAD TO SHELL	80 %
HYDROSTATIC TEST PRESSURE (PSIG)	325
SURFACE AREA (SQ. FT.)	172
RELIEF VALVE SETTING (PSIG)	250
RELIEF DISCHARGE RATE - (CFM REQ'D.)	1096
HEAT TREATMENT NOT REQURIED	
CODE: ASME SECTION VIII DIV. I	
STANDARDS: UNDERWRITERS LABORATORIES INC.	MH-5127
N.F.P.A. 58 LP GAS CODE	
MATERIAL SPECS.: TANK FLANGES SA-105 or SA-181	
ADAPTOR SA-105	
PIPE - SA53B OR SA106B	

PART NO: 0110003X
0110004X

MARK	QTY.	SIZE	TYPE	FITTINGS REGO	FITTINGS SHERWOOD	SERVICE
A	1	2 1/2	SCHED. 80 PIPE T.O.E. X 16 1/8" LG.	BG8475RL24.1	PV2098PT	MULTIVALVE
(ALT.)	1	2 1/2	SCHED. 80 PIPE T.O.E. X 9 1/8" LG. & DOME HT. = 18"	BG8475RL24.1	PV2098PT	MULTIVALVE
B	1	3/4	XH PLG. W / EVAC TUBE	7590U	PVE5136	CHEK-LOK
C	1	3/4	SCH. 40 PIPE (T.O.E.)			FILL PIPING X 12'3"R OR 18"LR
D	1	2 1/2	XH SOCKET WELD FLG.			RISER PIPE ATTACHMENT
E	1	1 1/4	4 - BOLT Style	SR: SHERWOOD 1281-004 LR: 1281-008 ROCHESTER 86281-495 86281-484 SQUIBB-TAYLOR JB316 JB-386		FLOAT GAUGE
F	1	1/8	BRASS TUBE			OUTAGE TUBE, 17 9/16" SR 24 9/16" LR

MARK	QTY.	DESCRIPTION	DWG. NO.
1	2	SHELL- 0.238" X 51" X 127 5/16" - SA455 / SA414G	
2	2	HEADS - 40 1/2" I.D. X 0.202" - HEMI; SA414C	
3	4	LIFTING LUGS	D - 2
4	2	TANK LEGS (SINGLE PIECE LEG)	D - 3
4 (OPT)	4	TANK LEGS, 1/4" X 2 1/2"	D - 2
5	1	DOME, 2 PIECE, HINGED	D - 5
6	2	SNAP-LOCK CLIPS	D-29&D-30
7	2	ANODE ATTACHMENT(ROUND DISK W/ WIRE)	D - 7
8	1	DATA PLATE , 1000 GAL. , U/G	

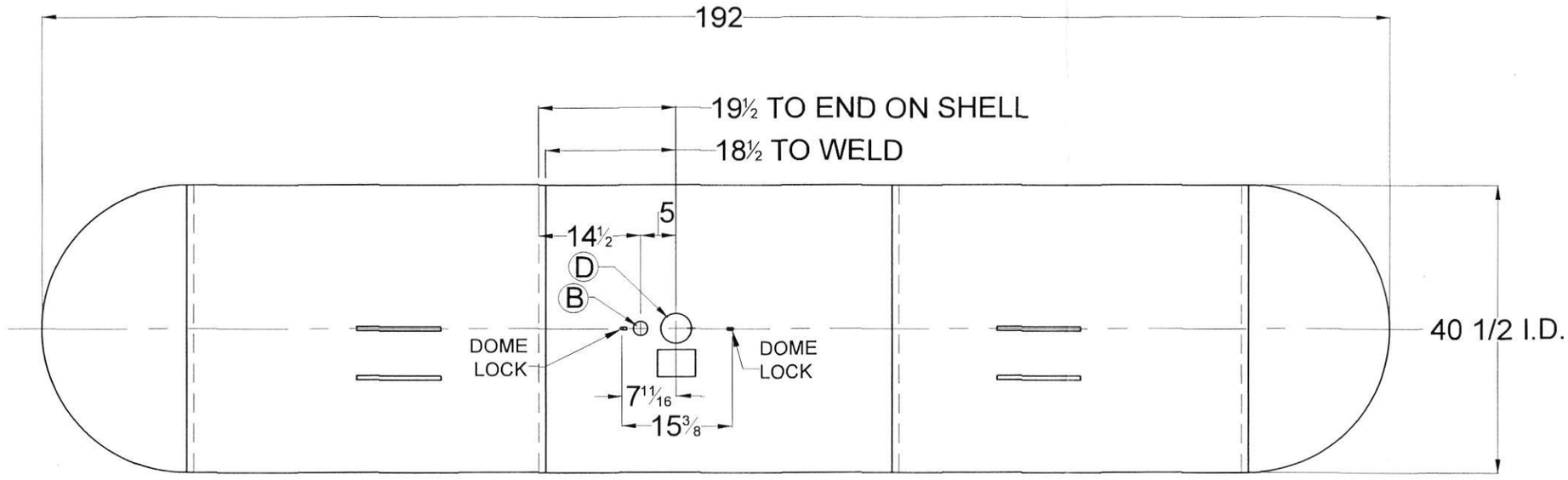
REV.	BY:	DESCRIPTION	DATE:
21	CDH	CORRECTED MARK "1" TO TWO SHELLS	4/15/02
22	CDH	REVISED MDMT PRESSURE TO 250 PSI	8/13/02
23	CDH	DELETED DOME LUGS, ADDED SNAP LOCKS	9/3/02
24	CDH	REPOSITIONED SNAP-LOCK DETAIL	10/16/02
25	CDH	ADDED NOTE FOR SLC IN SIDE ELEVATION	3/11/03
26	CDH	ADDED FLOAT GAUGE DESCRIPTIONS	5/6/03
27	CDH	CORRECTED SHELL LENGTH	11/12/03
28	w/o	ADDED SA414G SHELL OPTION	9/17/04
29	w/o	ADDED OPTION FOR SA181 FLANGES	8/4/05
30	w/o	REVISED COMPANY NAME	12/08/07
31	w/o	CHANGED TO NARROW PLATE	03/09/09
32	w/o	UPDATE NAME PLATE	08/08/12

1000 W.G. UNDERGROUND
PROPANE TANK-TYPE-AWT-UG

AMERICAN WELDING & TANK LLC

DATE:	DRAWN BY:	APPROVED BY:	REVISION	DRAWING No.
01 / 03 / 00	RAC	CDH	32	R - 1000MW

UG STANDARD



TOP VIEW

MARK	QTY.	SIZE	HOLE DIAMETER
B	1	3/4	1 9/16
D	1	2 1/2	3 3/16

1000 W.G. UNDERGROUND
PROPANE TANK-TYPE-AWT-UG

AMERICAN WELDING & TANK LLC
FITTING LAYOUT

DATE:	DRAWN BY:	APPROVED BY:	REVISION:	DRAWING No.:
01 / 03 / 00	RAC	CDH	32	R - 1000MW

RECEIVED

DEC 2 8 2020

LICENSES & PERMITS DIVISION

PERMIT NUMBER: B 200045565 **DATE ACCEPTED:**

RESIDENTIAL BUILDING PERMIT APPLICATION

HOWARD COUNTY DEPARTMENT OF INSPECTIONS, LICENSES, AND PERMITS

3430 COURT HOUSE DRIVE, ELLICOTT CITY, MD 21043 - PHONE: (410) 313-2455 OPTION #4

www.howardcountymd.gov

BUILDING SITE ADDRESS *REQUIRED*

Street Address: 5620 Dosa Court			Unit:
City: Clarksville	State: **MD**		Zip Code: 21029
Subdivision/Village/Complex Name: The Woodlands		SDP/WP/BA #:	
Lot: 1	Tax Map: 28	Parcel: 15	Grading Permit #: ~~WP-21-062~~

DESCRIPTION OF WORK *REQUIRED*

Existing Use: Vacant Lot	Proposed Use: SF Home	Estimated Cost: $ 632,556

Trade Work to Be Completed *(Separate Permits Required)*: ☒ Mechanical (HVACR) ☒ Electrical ☒ Plumbing ☐ None

2-STORY SFD (PER WKSHT)

PROPERTY OWNER INFORMATION *REQUIRED*

Owner(s) Name(s) *(As it appears on tax records)*: Williamsburg Group LLC		Primary Residence: ☐ Yes ☒ No
Owner's Street Address: 5485 Harpers Farm Rd #260		
City: Columbia	State: MD	Zip Code: 21044
Phone: 410-997-3800	Email: marinamorris@williamsburgllc.com	

APPLICANT NAME *REQUIRED - INDIVIDUAL WHO SIGNS THIS APPLICATION*

Business Name: same as above	Contact Name:	
Street Address:		
City:	State:	Zip Code:
Phone:	Email:	

CONTRACTOR INFORMATION *REQUIRED*

Business Name: same as above		
Licensee's Name:	**License #:**	
Street Address:		
City:	State:	Zip Code:
Phone:	Email:	

ARCHITECT/ENGINEER INFORMATION *INDIVIDUAL WHO SIGNED PLANS, IF APPLICABLE*

Business Name:	Name:	
Street Address:		
City:	State:	Zip Code:
Phone:	Email:	

BUILDING CHARACTERISTICS *REQUIRED*

Primary Structure: ☒ SF Dwelling ☐ SF Townhouse ☐ SF Duplex ☐ Mobile Home ☐ Multi-Family Dwelling (MF*) Condo: ☐ Yes ☒ No

Utilities: ☒ Electric ☒ Gas Water Supply: ☐ Public ☒ Private (Well) Sewage Disposal: ☐ Public ☒ Private (Septic)

Heating System: ☐ Electric ☐ Natural Gas ☒ Propane ☐ Other: Roadside Tree Project: ☒ No ☐ Yes: #

Sprinkler System: ☐ NFPA 13 ☐ NFPA 13R ☒ NFPA 13D ☐ None Fire Alarm System: ☐ Yes ☒ No ☐ Voice Evac

ADDITIONAL RESIDENTIAL INFORMATION *(PLEASE SELECT/COMPLETE ALL THAT APPLY)*

Model Name & Options: Dorchester IV

# of Bedrooms (SF): 5	# of efficiency units (MF*):	# of 1 BR (MF*):	# of 2 BR (MF*):	# of 3 BR (MF*):
# Rooms: 11 Rooms	# Full Baths: 3	# Half Baths: 1	# Fireplaces: 1	

Garage/Carport Info: ☒ Attached Garage ☐ Detached Garage ☐ Integral Garage ☐ Carport ☐ None

Basement/Foundation Info: ☐ Slab on Grade ☐ Post & Pier ☒ Unfinished Basement ☐ Finished Basement: ☐ Full or ☐ Partial

1st Fl Width: 71	1st Fl Depth: 63	2nd Fl Width: 61	2nd Fl Depth: 52	Bsmt Width: 71	Bsmt Depth: 43.5

Energy Method: ☐ Prescriptive ☐ Performance ☐ UA Alternative ☐ ERI Gross Area: ~~4,000~~ 3,998 sq ft Occupiable Area: ~~3,200~~ 3,198 sq ft

AGREEMENT/ DISCALIMER *REQUIRED*

THE UNDERSIGNED HEREBY CERTIFIES AND AGREES AS FOLLOWS: (1) THAT HE/SHE IS AUTHORIZED TO MAKE THIS APPLICATION; (2) THAT THE INFORMATION IS CORRECT; (3) THAT HE/SHE WILL COMPLY WITH ALL REGULATIONS OF HOWARD COUNTY WHICH ARE APPLICABLE THERETO; (4) THAT HE/SHE WILL PERFORM NO WORK ON THE ABOVE REFERENCED PROPERTY NOT SPECIFICALLY DESCRIBED IN THIS APPLICATION; (5) THAT HE/SHE GRANTS COUNTY OFFICIALS THE RIGHT TO ENTER ONTO THIS PROPERTY FOR THE PURPOSE OF INSPECTING THE WORK PERMITTED AND POSTING NOTICES.

Marina Morris — 12/29/20

APPLICANT'S ORIGINAL SIGNATURE — DATE SIGNED

FOR OFFICE USE ONLY

CHECKS PAYABLE TO: DIRECTOR OF FINANCE OF HOWARD COUNTY

AGENCIES REQUIRED/APPROVALS:

☒ PR	☐ DPZ	☒ DED	☒ Health 12/30/2020 RB	☒ SHA	☐ CID

SUBMITTAL FEES: $150.00	PAYMENT: CK # 136169	ACCEPTED BY: DROPBOX

SOILS LEGEND

SYMBOL	NAME / DESCRIPTION	GROUP	'K' FACTOR
GnC	GAILA LOAM, 8 TO 15 PERCENT SLOPES	B	0.24
GgB	GLENELG LOAM, 3 TO 8 PERCENT SLOPES	B	0.32
GmB	GLENVILLE SILT LOAM, 3 TO 8 PERCENT SLOPES	C	0.37
MaC	MANOR LOAM, 8 TO 15 PERCENT SLOPES	B	0.24
MaD	MANOR LOAM, 15 TO 25 PERCENT SLOPES	B	0.24
WhB	WELTSHIRE SILT LOAM, 3 TO 8 PERCENT SLOPES	C	0.24

NOTES:
1) SOIL INFORMATION HAS BEEN TAKEN FROM THE UNITED STATES DEPARTMENT OF AGRICULTURE; NATURAL RESOURCES CONSERVATION SERVICE; WEB SOIL SURVEY. SOILS GRID 12, SUB-GRID 205.
2) HIGHLY ERODIBLE SOILS ARE THOSE SOILS WITH A SLOPE GREATER THAN 15 PERCENT OR THOSE SOILS WITH A SOIL ERODIBILITY FACTOR 'K' GREATER THAN 0.35 AND WITH A SLOPE GREATER THAN 5 PERCENT.

BENCHMARKS

NUMBER	NORTHING	EASTING	ELEVATION	DESCRIPTION
28HC	565,351.782	1,332,102.483	552.207	S SIDE OF ROUTE 32, 0.2 MILES W OF EXIT 20 SIGN, 41' 320' E OF GUARD RAIL
34BA	563,852.491	1,324,672.107	450.048	2.5' N OF EDGE OF PAVEMENT OF ROUTE 32 13.3' SE OF EXIT 20 SIGN

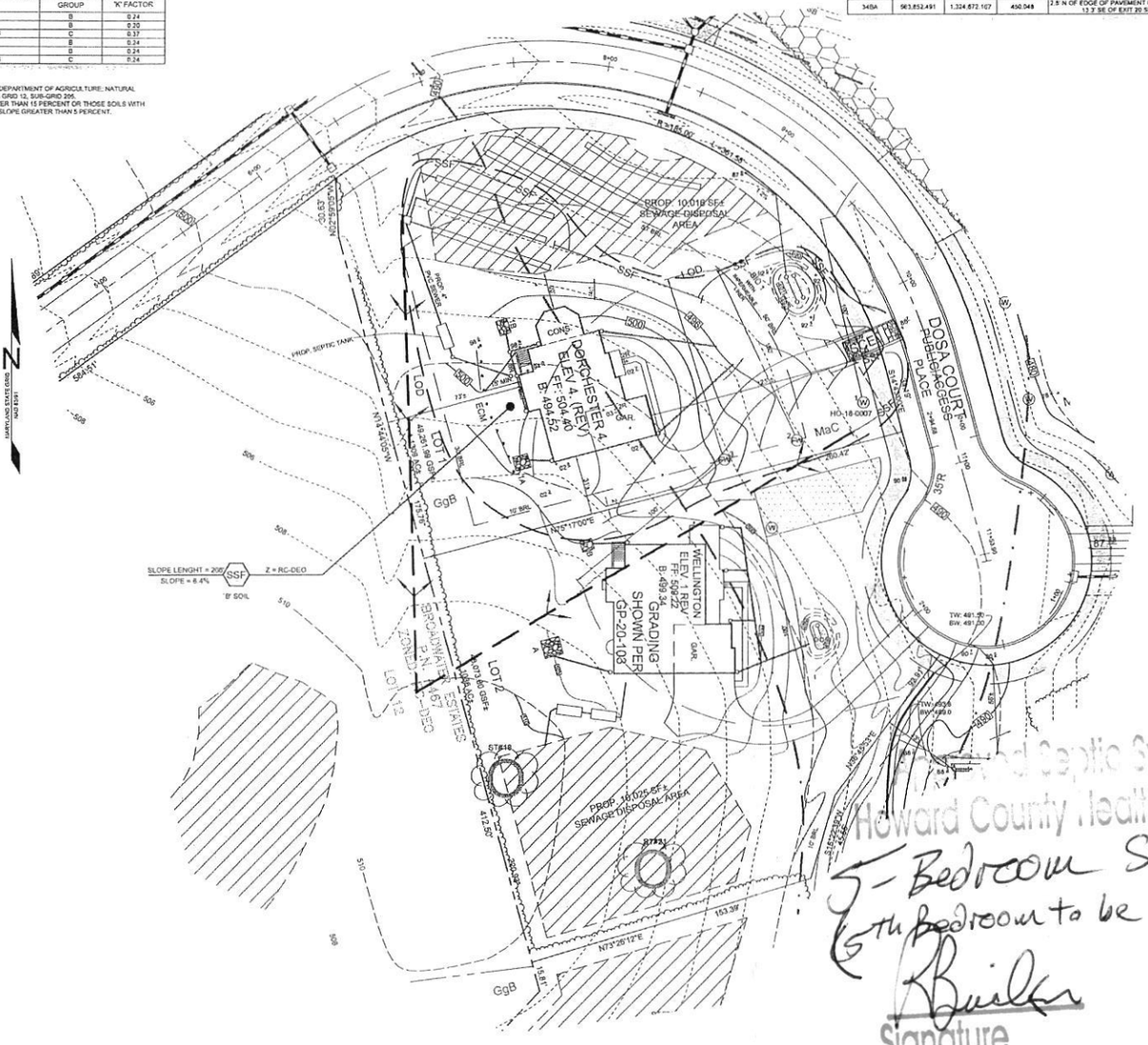
LEGEND

EXISTING CONTOUR 492
PROPOSED CONTOUR (492)
EXISTING SPOT ELEVATION 490.3
PROPOSED SPOT ELEVATION +493
DIRECTION OF FLOW
EXISTING TREELINE
SOIL BOUNDARY
EXISTING STREAM
100' STREAM BUFFER SB
EXISTING SPECIMEN TREE APPROVED FOR REMOVAL IF NECESSARY ST#43
EXISTING WELL W
FUTURE WELL LOCATION FW
WALK OUT BASEMENT WOB



HOWARD COUNTY, MARYLAND ADC MAP 25 A7

VICINITY MAP
SCALE: 1"=2000'


PROP. 10,019 SF± SEWAGE DISPOSAL AREA
DORCHESTER 4 ELEV. 4 (REV) F.F. 504.40 B. 494.52
DOSA COURT PUBLIC ACCESS PLACE
WELLINGTON ELEV. 1 REV F.F. 502.2 B. 493.3
GRADING SHOWN PER GP-20-108
PROP. 10,025 SF± SEWAGE DISPOSAL AREA
LOT 1 49,591.99 GSF±
LOT 2 37,186 GSF±
BROADMARK ESTATES
ZONE R-ED
SLOPE LENGHT = 20ft
SLOPE = 6.4%
Z = RC-DEO
'B' SOIL
PROP. SEPTIC TANK
PROP. 4" PVC SEWER
PROP. WATER
EX. 8" WATER
EX. 8" SEWER
EX. 12" WATER
EX. 15" SEWER
EX. 24" WATER
EX. 24" SEWER
EX. 36" WATER
EX. 36" SEWER
EX. 48" WATER
EX. 48" SEWER
EX. 60" WATER
EX. 60" SEWER
EX. 72" WATER
EX. 72" SEWER
EX. 84" WATER
EX. 84" SEWER
EX. 96" WATER
EX. 96" SEWER
EX. 108" WATER
EX. 108" SEWER
EX. 120" WATER
EX. 120" SEWER
EX. 132" WATER
EX. 132" SEWER
EX. 144" WATER
EX. 144" SEWER
EX. 156" WATER
EX. 156" SEWER
EX. 168" WATER
EX. 168" SEWER
EX. 180" WATER
EX. 180" SEWER
EX. 192" WATER
EX. 192" SEWER
EX. 204" WATER
EX. 204" SEWER
EX. 216" WATER
EX. 216" SEWER
EX. 228" WATER
EX. 228" SEWER
EX. 240" WATER
EX. 240" SEWER
EX. 252" WATER
EX. 252" SEWER
EX. 264" WATER
EX. 264" SEWER
EX. 276" WATER
EX. 276" SEWER
EX. 288" WATER
EX. 288" SEWER
EX. 300" WATER
EX. 300" SEWER
EX. 312" WATER
EX. 312" SEWER
EX. 324" WATER
EX. 324" SEWER
EX. 336" WATER
EX. 336" SEWER
EX. 348" WATER
EX. 348" SEWER
EX. 360" WATER
EX. 360" SEWER
EX. 372" WATER
EX. 372" SEWER
EX. 384" WATER
EX. 384" SEWER
EX. 396" WATER
EX. 396" SEWER
EX. 408" WATER
EX. 408" SEWER
EX. 420" WATER
EX. 420" SEWER
EX. 432" WATER
EX. 432" SEWER
EX. 444" WATER
EX. 444" SEWER
EX. 456" WATER
EX. 456" SEWER
EX. 468" WATER
EX. 468" SEWER
EX. 480" WATER
EX. 480" SEWER
EX. 492" WATER
EX. 492" SEWER
EX. 504" WATER
EX. 504" SEWER
EX. 516" WATER
EX. 516" SEWER
EX. 528" WATER
EX. 528" SEWER
EX. 540" WATER
EX. 540" SEWER
EX. 552" WATER
EX. 552" SEWER
EX. 564" WATER
EX. 564" SEWER
EX. 576" WATER
EX. 576" SEWER
EX. 588" WATER
EX. 588" SEWER
EX. 600" WATER
EX. 600" SEWER
EX. 612" WATER
EX. 612" SEWER
EX. 624" WATER
EX. 624" SEWER
EX. 636" WATER
EX. 636" SEWER
EX. 648" WATER
EX. 648" SEWER
EX. 660" WATER
EX. 660" SEWER
EX. 672" WATER
EX. 672" SEWER
EX. 684" WATER
EX. 684" SEWER
EX. 696" WATER
EX. 696" SEWER
EX. 708" WATER
EX. 708" SEWER
EX. 720" WATER
EX. 720" SEWER
EX. 732" WATER
EX. 732" SEWER
EX. 744" WATER
EX. 744" SEWER
EX. 756" WATER
EX. 756" SEWER
EX. 768" WATER
EX. 768" SEWER
EX. 780" WATER
EX. 780" SEWER
EX. 792" WATER
EX. 792" SEWER
EX. 804" WATER
EX. 804" SEWER
EX. 816" WATER
EX. 816" SEWER
EX. 828" WATER
EX. 828" SEWER
EX. 840" WATER
EX. 840" SEWER
EX. 852" WATER
EX. 852" SEWER
EX. 864" WATER
EX. 864" SEWER
EX. 876" WATER
EX. 876" SEWER
EX. 888" WATER
EX. 888" SEWER
EX. 900" WATER
EX. 900" SEWER
EX. 912" WATER
EX. 912" SEWER
EX. 924" WATER
EX. 924" SEWER
EX. 936" WATER
EX. 936" SEWER
EX. 948" WATER
EX. 948" SEWER
EX. 960" WATER
EX. 960" SEWER
EX. 972" WATER
EX. 972" SEWER
EX. 984" WATER
EX. 984" SEWER
EX. 996" WATER
EX. 996" SEWER
EX. 1008" WATER
EX. 1008" SEWER
EX. 1020" WATER
EX. 1020" SEWER
EX. 1032" WATER
EX. 1032" SEWER
EX. 1044" WATER
EX. 1044" SEWER
EX. 1056" WATER
EX. 1056" SEWER
EX. 1068" WATER
EX. 1068" SEWER
EX. 1080" WATER
EX. 1080" SEWER
EX. 1092" WATER
EX. 1092" SEWER
EX. 1104" WATER
EX. 1104" SEWER
EX. 1116" WATER
EX. 1116" SEWER
EX. 1128" WATER
EX. 1128" SEWER
EX. 1140" WATER
EX. 1140" SEWER
EX. 1152" WATER
EX. 1152" SEWER
EX. 1164" WATER
EX. 1164" SEWER
EX. 1176" WATER
EX. 1176" SEWER
EX. 1188" WATER
EX. 1188" SEWER
EX. 1200" WATER
EX. 1200" SEWER
EX. 1212" WATER
EX. 1212" SEWER
EX. 1224" WATER
EX. 1224" SEWER
EX. 1236" WATER
EX. 1236" SEWER
EX. 1248" WATER
EX. 1248" SEWER
EX. 1260" WATER
EX. 1260" SEWER
EX. 1272" WATER
EX. 1272" SEWER
EX. 1284" WATER
EX. 1284" SEWER
EX. 1296" WATER
EX. 1296" SEWER
EX. 1308" WATER
EX. 1308" SEWER
EX. 1320" WATER
EX. 1320" SEWER
EX. 1332" WATER
EX. 1332" SEWER
EX. 1344" WATER
EX. 1344" SEWER
EX. 1356" WATER
EX. 1356" SEWER
EX. 1368" WATER
EX. 1368" SEWER
EX. 1380" WATER
EX. 1380" SEWER
EX. 1392" WATER
EX. 1392" SEWER
EX. 1404" WATER
EX. 1404" SEWER
EX. 1416" WATER
EX. 1416" SEWER
EX. 1428" WATER
EX. 1428" SEWER
EX. 1440" WATER
EX. 1440" SEWER
EX. 1452" WATER
EX. 1452" SEWER
EX. 1464" WATER
EX. 1464" SEWER
EX. 1476" WATER
EX. 1476" SEWER
EX. 1488" WATER
EX. 1488" SEWER
EX. 1500" WATER
EX. 1500" SEWER
EX. 1512" WATER
EX. 1512" SEWER
EX. 1524" WATER
EX. 1524" SEWER
EX. 1536" WATER
EX. 1536" SEWER
EX. 1548" WATER
EX. 1548" SEWER
EX. 1560" WATER
EX. 1560" SEWER
EX. 1572" WATER
EX. 1572" SEWER
EX. 1584" WATER
EX. 1584" SEWER
EX. 1596" WATER
EX. 1596" SEWER
EX. 1608" WATER
EX. 1608" SEWER
EX. 1620" WATER
EX. 1620" SEWER
EX. 1632" WATER
EX. 1632" SEWER
EX. 1644" WATER
EX. 1644" SEWER
EX. 1656" WATER
EX. 1656" SEWER
EX. 1668" WATER
EX. 1668" SEWER
EX. 1680" WATER
EX. 1680" SEWER
EX. 1692" WATER
EX. 1692" SEWER
EX. 1704" WATER
EX. 1704" SEWER
EX. 1716" WATER
EX. 1716" SEWER
EX. 1728" WATER
EX. 1728" SEWER
EX. 1740" WATER
EX. 1740" SEWER
EX. 1752" WATER
EX. 1752" SEWER
EX. 1764" WATER
EX. 1764" SEWER
EX. 1776" WATER
EX. 1776" SEWER
EX. 1788" WATER
EX. 1788" SEWER
EX. 1800" WATER
EX. 1800" SEWER
EX. 1812" WATER
EX. 1812" SEWER
EX. 1824" WATER
EX. 1824" SEWER
EX. 1836" WATER
EX. 1836" SEWER
EX. 1848" WATER
EX. 1848" SEWER
EX. 1860" WATER
EX. 1860" SEWER
EX. 1872" WATER
EX. 1872" SEWER
EX. 1884" WATER
EX. 1884" SEWER
EX. 1896" WATER
EX. 1896" SEWER
EX. 1908" WATER
EX. 1908" SEWER
EX. 1920" WATER
EX. 1920" SEWER
EX. 1932" WATER
EX. 1932" SEWER
EX. 1944" WATER
EX. 1944" SEWER
EX. 1956" WATER
EX. 1956" SEWER
EX. 1968" WATER
EX. 1968" SEWER
EX. 1980" WATER
EX. 1980" SEWER
EX. 1992" WATER
EX. 1992" SEWER
EX. 2004" WATER
EX. 2004" SEWER
EX. 2016" WATER
EX. 2016" SEWER
EX. 2028" WATER
EX. 2028" SEWER
EX. 2040" WATER
EX. 2040" SEWER
EX. 2052" WATER
EX. 2052" SEWER
EX. 2064" WATER
EX. 2064" SEWER
EX. 2076" WATER
EX. 2076" SEWER
EX. 2088" WATER
EX. 2088" SEWER
EX. 2100" WATER
EX. 2100" SEWER
EX. 2112" WATER
EX. 2112" SEWER
EX. 2124" WATER
EX. 2124" SEWER
EX. 2136" WATER
EX. 2136" SEWER
EX. 2148" WATER
EX. 2148" SEWER
EX. 2160" WATER
EX. 2160" SEWER
EX. 2172" WATER
EX. 2172" SEWER
EX. 2184" WATER
EX. 2184" SEWER
EX. 2196" WATER
EX. 2196" SEWER
EX. 2208" WATER
EX. 2208" SEWER
EX. 2220" WATER
EX. 2220" SEWER
EX. 2232" WATER
EX. 2232" SEWER
EX. 2244" WATER
EX. 2244" SEWER
EX. 2256" WATER
EX. 2256" SEWER
EX. 2268" WATER
EX. 2268" SEWER
EX. 2280" WATER
EX. 2280" SEWER
EX. 2292" WATER
EX. 2292" SEWER
EX. 2304" WATER
EX. 2304" SEWER
EX. 2316" WATER
EX. 2316" SEWER
EX. 2328" WATER
EX. 2328" SEWER
EX. 2340" WATER
EX. 2340" SEWER
EX. 2352" WATER
EX. 2352" SEWER
EX. 2364" WATER
EX. 2364" SEWER
EX. 2376" WATER
EX. 2376" SEWER
EX. 2388" WATER
EX. 2388" SEWER
EX. 2400" WATER
EX. 2400" SEWER
EX. 2412" WATER
EX. 2412" SEWER
EX. 2424" WATER
EX. 2424" SEWER
EX. 2436" WATER
EX. 2436" SEWER
EX. 2448" WATER
EX. 2448" SEWER
EX. 2460" WATER
EX. 2460" SEWER
EX. 2472" WATER
EX. 2472" SEWER
EX. 2484" WATER
EX. 2484" SEWER
EX. 2496" WATER
EX. 2496" SEWER
EX. 2508" WATER
EX. 2508" SEWER
EX. 2520" WATER
EX. 2520" SEWER
EX. 2532" WATER
EX. 2532" SEWER
EX. 2544" WATER
EX. 2544" SEWER
EX. 2556" WATER
EX. 2556" SEWER
EX. 2568" WATER
EX. 2568" SEWER
EX. 2580" WATER
EX. 2580" SEWER
EX. 2592" WATER
EX. 2592" SEWER
EX. 2604" WATER
EX. 2604" SEWER
EX. 2616" WATER
EX. 2616" SEWER
EX. 2628" WATER
EX. 2628" SEWER
EX. 2640" WATER
EX. 2640" SEWER
EX. 2652" WATER
EX. 2652" SEWER
EX. 2664" WATER
EX. 2664" SEWER
EX. 2676" WATER
EX. 2676" SEWER
EX. 2688" WATER
EX. 2688" SEWER
EX. 2700" WATER
EX. 2700" SEWER
EX. 2712" WATER
EX. 2712" SEWER
EX. 2724" WATER
EX. 2724" SEWER
EX. 2736" WATER
EX. 2736" SEWER
EX. 2748" WATER
EX. 2748" SEWER
EX. 2760" WATER
EX. 2760" SEWER
EX. 2772" WATER
EX. 2772" SEWER
EX. 2784" WATER
EX. 2784" SEWER
EX. 2796" WATER
EX. 2796" SEWER
EX. 2808" WATER
EX. 2808" SEWER
EX. 2820" WATER
EX. 2820" SEWER
EX. 2832" WATER
EX. 2832" SEWER
EX. 2844" WATER
EX. 2844" SEWER
EX. 2856" WATER
EX. 2856" SEWER
EX. 2868" WATER
EX. 2868" SEWER
EX. 2880" WATER
EX. 2880" SEWER
EX. 2892" WATER
EX. 2892" SEWER
EX. 2904" WATER
EX. 2904" SEWER
EX. 2916" WATER
EX. 2916" SEWER
EX. 2928" WATER
EX. 2928" SEWER
EX. 2940" WATER
EX. 2940" SEWER
EX. 2952" WATER
EX. 2952" SEWER
EX. 2964" WATER
EX. 2964" SEWER
EX. 2976" WATER
EX. 2976" SEWER
EX. 2988" WATER
EX. 2988" SEWER
EX. 3000" WATER
EX. 3000" SEWER
EX. 3012" WATER
EX. 3012" SEWER
EX. 3024" WATER
EX. 3024" SEWER
EX. 3036" WATER
EX. 3036" SEWER
EX. 3048" WATER
EX. 3048" SEWER
EX. 3060" WATER
EX. 3060" SEWER
EX. 3072" WATER
EX. 3072" SEWER
EX. 3084" WATER
EX. 3084" SEWER
EX. 3096" WATER
EX. 3096" SEWER
EX. 3108" WATER
EX. 3108" SEWER
EX. 3120" WATER
EX. 3120" SEWER
EX. 3132" WATER
EX. 3132" SEWER
EX. 3144" WATER
EX. 3144" SEWER
EX. 3156" WATER
EX. 3156" SEWER
EX. 3168" WATER
EX. 3168" SEWER
EX. 3180" WATER
EX. 3180" SEWER
EX. 3192" WATER
EX. 3192" SEWER
EX. 3204" WATER
EX. 3204" SEWER
EX. 3216" WATER
EX. 3216" SEWER
EX. 3228" WATER
EX. 3228" SEWER
EX. 3240" WATER
EX. 3240" SEWER
EX. 3252" WATER
EX. 3252" SEWER
EX. 3264" WATER
EX. 3264" SEWER
EX. 3276" WATER
EX. 3276" SEWER
EX. 3288" WATER
EX. 3288" SEWER
EX. 3300" WATER
EX. 3300" SEWER
EX. 3312" WATER
EX. 3312" SEWER
EX. 3324" WATER
EX. 3324" SEWER
EX. 3336" WATER
EX. 3336" SEWER
EX. 3348" WATER
EX. 3348" SEWER
EX. 3360" WATER
EX. 3360" SEWER
EX. 3372" WATER
EX. 3372" SEWER
EX. 3384" WATER
EX. 3384" SEWER
EX. 3396" WATER
EX. 3396" SEWER
EX. 3408" WATER
EX. 3408" SEWER
EX. 3420" WATER
EX. 3420" SEWER
EX. 3432" WATER
EX. 3432" SEWER
EX. 3444" WATER
EX. 3444" SEWER
EX. 3456" WATER
EX. 3456" SEWER
EX. 3468" WATER
EX. 3468" SEWER
EX. 3480" WATER
EX. 3480" SEWER
EX. 3492" WATER
EX. 3492" SEWER
EX. 3504" WATER
EX. 3504" SEWER
EX. 3516" WATER
EX. 3516" SEWER
EX. 3528" WATER
EX. 3528" SEWER
EX. 3540" WATER
EX. 3540" SEWER
EX. 3552" WATER
EX. 3552" SEWER
EX. 3564" WATER
EX. 3564" SEWER
EX. 3576" WATER
EX. 3576" SEWER
EX. 3588" WATER
EX. 3588" SEWER
EX. 3600" WATER
EX. 3600" SEWER
EX. 3612" WATER
EX. 3612" SEWER
EX. 3624" WATER
EX. 3624" SEWER
EX. 3636" WATER
EX. 3636" SEWER
EX. 3648" WATER
EX. 3648" SEWER
EX. 3660" WATER
EX. 3660" SEWER
EX. 3672" WATER
EX. 3672" SEWER
EX. 3684" WATER
EX. 3684" SEWER
EX. 3696" WATER
EX. 3696" SEWER
EX. 3708" WATER
EX. 3708" SEWER
EX. 3720" WATER
EX. 3720" SEWER
EX. 3732" WATER
EX. 3732" SEWER
EX. 3744" WATER
EX. 3744" SEWER
EX. 3756" WATER
EX. 3756" SEWER
EX. 3768" WATER
EX. 3768" SEWER
EX. 3780" WATER
EX. 3780" SEWER
EX. 3792" WATER
EX. 3792" SEWER
EX. 3804" WATER
EX. 3804" SEWER
EX. 3816" WATER
EX. 3816" SEWER
EX. 3828" WATER
EX. 3828" SEWER
EX. 3840" WATER
EX. 3840" SEWER
EX. 3852" WATER
EX. 3852" SEWER
EX. 3864" WATER
EX. 3864" SEWER
EX. 3876" WATER
EX. 3876" SEWER
EX. 3888" WATER
EX. 3888" SEWER
EX. 3900" WATER
EX. 3900" SEWER
EX. 3912" WATER
EX. 3912" SEWER
EX. 3924" WATER
EX. 3924" SEWER
EX. 3936" WATER
EX. 3936" SEWER
EX. 3948" WATER
EX. 3948" SEWER
EX. 3960" WATER
EX. 3960" SEWER
EX. 3972" WATER
EX. 3972" SEWER
EX. 3984" WATER
EX. 3984" SEWER
EX. 3996" WATER
EX. 3996" SEWER
EX. 4008" WATER
EX. 4008" SEWER
EX. 4020" WATER
EX. 4020" SEWER
EX. 4032" WATER
EX. 4032" SEWER
EX. 4044" WATER
EX. 4044" SEWER
EX. 4056" WATER
EX. 4056" SEWER
EX. 4068" WATER
EX. 4068" SEWER
EX. 4080" WATER
EX. 4080" SEWER
EX. 4092" WATER
EX. 4092" SEWER
EX. 4104" WATER
EX. 4104" SEWER
EX. 4116" WATER
EX. 4116" SEWER
EX. 4128" WATER
EX. 4128" SEWER
EX. 4140" WATER
EX. 4140" SEWER
EX. 4152" WATER
EX. 4152" SEWER
EX. 4164" WATER
EX. 4164" SEWER
EX. 4176" WATER
EX. 4176" SEWER
EX. 4188" WATER
EX. 4188" SEWER
EX. 4200" WATER
EX. 4200" SEWER
EX. 4212" WATER
EX. 4212" SEWER
EX. 4224" WATER
EX. 4224" SEWER
EX. 4236" WATER
EX. 4236" SEWER
EX. 4248" WATER
EX. 4248" SEWER
EX. 4260" WATER
EX. 4260" SEWER
EX. 4272" WATER
EX. 4272" SEWER
EX. 4284" WATER
EX. 4284" SEWER
EX. 4296" WATER
EX. 4296" SEWER
EX. 4308" WATER
EX. 4308" SEWER
EX. 4320" WATER
EX. 4320" SEWER
EX. 4332" WATER
EX. 4332" SEWER
EX. 4344" WATER
EX. 4344" SEWER
EX. 4356" WATER
EX. 4356" SEWER
EX. 4368" WATER
EX. 4368" SEWER
EX. 4380" WATER
EX. 4380" SEWER
EX. 4392" WATER
EX. 4392" SEWER
EX. 4404" WATER
EX. 4404" SEWER
EX. 4416" WATER
EX. 4416" SEWER
EX. 4428" WATER
EX. 4428" SEWER
EX. 4440" WATER
EX. 4440" SEWER
EX. 4452" WATER
EX. 4452" SEWER
EX. 4464" WATER
EX. 4464" SEWER
EX. 4476" WATER
EX. 4476" SEWER
EX. 4488" WATER
EX. 4488" SEWER
EX. 4500" WATER
EX. 4500" SEWER
EX. 4512" WATER
EX. 4512" SEWER
EX. 4524" WATER
EX. 4524" SEWER
EX. 4536" WATER
EX. 4536" SEWER
EX. 4548" WATER
EX. 4548" SEWER
EX. 4560" WATER
EX. 4560" SEWER
EX. 4572" WATER
EX. 4572" SEWER
EX. 4584" WATER
EX. 4584" SEWER
EX. 4596" WATER
EX. 4596" SEWER
EX. 4608" WATER
EX. 4608" SEWER
EX. 4620" WATER
EX. 4620" SEWER
EX. 4632" WATER
EX. 4632" SEWER
EX. 4644" WATER
EX. 4644" SEWER
EX. 4656" WATER
EX. 4656" SEWER
EX. 4668" WATER
EX. 4668" SEWER
EX. 4680" WATER
EX. 4680" SEWER
EX. 4692" WATER
EX. 4692" SEWER
EX. 4704" WATER
EX. 4704" SEWER
EX. 4716" WATER
EX. 4716" SEWER
EX. 4728" WATER
EX. 4728" SEWER
EX. 4740" WATER
EX. 4740" SEWER
EX. 4752" WATER
EX. 4752" SEWER
EX. 4764" WATER
EX. 4764" SEWER
EX. 4776" WATER
EX. 4776" SEWER
EX. 4788" WATER
EX. 4788" SEWER
EX. 4800" WATER
EX. 4800" SEWER
EX. 4812" WATER
EX. 4812" SEWER
EX. 4824" WATER
EX. 4824" SEWER
EX. 4836" WATER
EX. 4836" SEWER
EX. 4848" WATER
EX. 4848" SEWER
EX. 4860" WATER
EX. 4860" SEWER
EX. 4872" WATER
EX. 4872" SEWER
EX. 4884" WATER
EX. 4884" SEWER
EX. 4896" WATER
EX. 4896" SEWER
EX. 4908" WATER
EX. 4908" SEWER
EX. 4920" WATER
EX. 4920" SEWER
EX. 4932" WATER
EX. 4932" SEWER
EX. 4944" WATER
EX. 4944" SEWER
EX. 4956" WATER
EX. 4956" SEWER
EX. 4968" WATER
EX. 4968" SEWER
EX. 4980" WATER
EX. 4980" SEWER
EX. 4992" WATER
EX. 4992" SEWER
EX. 5004" WATER
EX. 5004" SEWER
EX. 5016" WATER
EX. 5016" SEWER
EX. 5028" WATER
EX. 5028" SEWER
EX. 5040" WATER
EX. 5040" SEWER
EX. 5052" WATER
EX. 5052" SEWER
EX. 5064" WATER
EX. 5064" SEWER
EX. 5076" WATER
EX. 5076" SEWER
EX. 5088" WATER
EX. 5088" SEWER
EX. 5100" WATER
EX. 5100" SEWER
EX. 5112" WATER
EX. 5112" SEWER
EX. 5124" WATER
EX. 5124" SEWER
EX. 5136" WATER
EX. 5136" SEWER
EX. 5148" WATER
EX. 5148" SEWER
EX. 5160" WATER
EX. 5160" SEWER
EX. 5172" WATER
EX. 5172" SEWER
EX. 5184" WATER
EX. 5184" SEWER
EX. 5196" WATER
EX. 5196" SEWER
EX. 5208" WATER
EX. 5208" SEWER
EX. 5220" WATER
EX. 5220" SEWER
EX. 5232" WATER
EX. 5232" SEWER
EX. 5244" WATER
EX. 5244" SEWER
EX. 5256" WATER
EX. 5256" SEWER
EX. 5268" WATER
EX. 5268" SEWER
EX. 5280" WATER
EX. 5280" SEWER
EX. 5292" WATER
EX. 5292" SEWER
EX. 5304" WATER
EX. 5304" SEWER
EX. 5316" WATER
EX. 5316" SEWER
EX. 5328" WATER
EX. 5328" SEWER
EX. 5340" WATER
EX. 5340" SEWER
EX. 5352" WATER
EX. 5352" SEWER
EX. 5364" WATER
EX. 5364" SEWER
EX. 5376" WATER
EX. 5376" SEWER
EX. 5388" WATER
EX. 5388" SEWER
EX. 5400" WATER
EX. 5400" SEWER
EX. 5412" WATER
EX. 5412" SEWER
EX. 5424" WATER
EX. 5424" SEWER
EX. 5436" WATER
EX. 5436" SEWER
EX. 5448" WATER
EX. 5448" SEWER
EX. 5460" WATER
EX. 5460" SEWER
EX. 5472" WATER
EX. 5472" SEWER
EX. 5484" WATER
EX. 5484" SEWER
EX. 5496" WATER
EX. 5496" SEWER
EX. 5508" WATER
EX. 5508" SEWER
EX. 5520" WATER
EX. 5520" SEWER
EX. 5532" WATER
EX. 5532" SEWER
EX. 5544" WATER
EX. 5544" SEWER
EX. 5556" WATER
EX. 5556" SEWER
EX. 5568" WATER
EX. 5568" SEWER
EX. 5580" WATER
EX. 5580" SEWER
EX. 5592" WATER
EX. 5592" SEWER
EX. 5604" WATER
EX. 5604" SEWER
EX. 5616" WATER
EX. 5616" SEWER
EX. 5628" WATER
EX. 5628" SEWER
EX. 5640" WATER
EX. 5640" SEWER
EX. 5652" WATER
EX. 5652" SEWER
EX. 5664" WATER
EX. 5664" SEWER
EX. 5676" WATER
EX. 5676" SEWER
EX. 5688" WATER
EX. 5688" SEWER
EX. 5700" WATER
EX. 5700" SEWER
EX. 5712" WATER
EX. 5712" SEWER
EX. 5724" WATER
EX. 5724" SEWER
EX. 5736" WATER
EX. 5736" SEWER
EX. 5748" WATER
EX. 5748" SEWER
EX. 5760" WATER
EX. 5760" SEWER
EX. 5772" WATER
EX. 5772" SEWER
EX. 5784" WATER
EX. 5784" SEWER
EX. 5796" WATER
EX. 5796" SEWER
EX. 5808" WATER
EX. 5808" SEWER
EX. 5820" WATER
EX. 5820" SEWER
EX. 5832" WATER
EX. 5832" SEWER
EX. 5844" WATER
EX. 5844" SEWER
EX. 5856" WATER
EX. 5856" SEWER
EX. 5868" WATER
EX. 5868" SEWER
EX. 5880" WATER
EX. 5880" SEWER
EX. 5892" WATER
EX. 5892" SEWER
EX. 5904" WATER
EX. 5904" SEWER
EX. 5916" WATER
EX. 5916" SEWER
EX. 5928" WATER
EX. 5928" SEWER
EX. 5940" WATER
EX. 5940" SEWER
EX. 5952" WATER
EX. 5952" SEWER
EX. 5964" WATER
EX. 5964" SEWER
EX. 5976" WATER
EX. 5976" SEWER
EX. 5988" WATER
EX. 5988" SEWER
EX. 6000" WATER
EX. 6000" SEWER
EX. 6012" WATER
EX. 6012" SEWER
EX. 6024" WATER
EX. 6024" SEWER
EX. 6036" WATER
EX. 6036" SEWER
EX. 6048" WATER
EX. 6048" SEWER
EX. 6060" WATER
EX. 6060" SEWER
EX. 6072" WATER
EX. 6072" SEWER
EX. 6084" WATER
EX. 6084" SEWER
EX. 6096" WATER
EX. 6096" SEWER
EX. 6108" WATER
EX. 6108" SEWER
EX. 6120" WATER
EX. 6120" SEWER
EX. 6132" WATER
EX. 6132" SEWER
EX. 6144" WATER
EX. 6144" SEWER
EX. 6156" WATER
EX. 6156" SEWER
EX. 6168" WATER
EX. 6168" SEWER
EX. 6180" WATER
EX. 6180" SEWER
EX. 6192" WATER
EX. 6192" SEWER
EX. 6204" WATER
EX. 6204" SEWER
EX. 6216" WATER
EX. 6216" SEWER
EX. 6228" WATER
EX. 6228" SEWER
EX. 6240" WATER
EX. 6240" SEWER
EX. 6252" WATER
EX. 6252" SEWER
EX. 6264" WATER
EX. 6264" SEWER
EX. 6276" WATER
EX. 6276" SEWER
EX. 6288" WATER
EX. 6288" SEWER
EX. 6300" WATER
EX. 6300" SEWER
EX. 6312" WATER
EX. 6312" SEWER
EX. 6324" WATER
EX. 6324" SEWER
EX. 6336" WATER
EX. 6336" SEWER
EX. 6348" WATER
EX. 6348" SEWER
EX. 6360" WATER
EX. 6360" SEWER
EX. 6372" WATER
EX. 6372" SEWER
EX. 6384" WATER
EX. 6384" SEWER
EX. 6396" WATER
EX. 6396" SEWER
EX. 6408" WATER
EX. 6408" SEWER
EX. 6420" WATER
EX. 6420" SEWER
EX. 6432" WATER
EX. 6432" SEWER
EX. 6444" WATER
EX. 6444" SEWER
EX. 6456" WATER
EX. 6456" SEWER
EX. 6468" WATER
EX. 6468" SEWER
EX. 6480" WATER
EX. 6480" SEWER
EX. 6492" WATER
EX. 6492" SEWER
EX. 6504" WATER
EX. 6504" SEWER
EX. 6516" WATER
EX. 6516" SEWER
EX. 6528" WATER
EX. 6528" SEWER
EX. 6540" WATER
EX. 6540" SEWER
EX. 6552" WATER
EX. 6552" SEWER
EX. 6564" WATER
EX. 6564" SEWER
EX. 6576" WATER
EX. 6576" SEWER
EX. 6588" WATER
EX. 6588" SEWER
EX. 6600" WATER
EX. 6600" SEWER
EX. 6612" WATER
EX. 6612" SEWER
EX. 6624" WATER
EX. 6624" SEWER
EX. 6636" WATER
EX. 6636" SEWER
EX. 6648" WATER
EX. 6648" SEWER
EX. 6660" WATER
EX. 6660" SEWER
EX. 6672" WATER
EX. 6672" SEWER
EX. 6684" WATER
EX. 6684" SEWER
EX. 6696" WATER
EX. 6696" SEWER
EX. 6708" WATER
EX. 6708" SEWER
EX. 6720" WATER
EX. 6720" SEWER
EX. 6732" WATER
EX. 6732" SEWER
EX. 6744" WATER
EX. 6744" SEWER
EX. 6756" WATER
EX. 6756" SEWER
EX. 6768" WATER
EX. 6768" SEWER
EX. 6780" WATER
EX. 6780" SEWER
EX. 6792" WATER
EX. 6792" SEWER
EX. 6804" WATER
EX. 6804" SEWER
EX. 6816" WATER
EX. 6816" SEWER
EX. 6828" WATER
EX. 6828" SEWER
EX. 6840" WATER
EX. 6840" SEWER
EX. 6852" WATER
EX. 6852" SEWER
EX. 6864" WATER
EX. 6864" SEWER
EX. 6876" WATER
EX. 6876" SEWER
EX. 6888" WATER
EX. 6888" SEWER
EX. 6900" WATER
EX. 6900" SEWER
EX. 6912" WATER
EX. 6912" SEWER
EX. 6924" WATER
EX. 6924" SEWER
EX. 6936" WATER
EX. 6936" SEWER
EX. 6948" WATER
EX. 6948" SEWER
EX. 6960" WATER
EX. 6960" SEWER
EX. 6972" WATER
EX. 6972" SEWER
EX. 6984" WATER
EX. 6984" SEWER
EX. 6996" WATER
EX. 6996" SEWER
EX. 7008" WATER
EX. 7008" SEWER
EX. 7020" WATER
EX. 7020" SEWER
EX. 7032" WATER
EX. 7032" SEWER
EX. 7044" WATER
EX. 7044" SEWER
EX. 7056" WATER
EX. 7056" SEWER
EX. 7068" WATER
EX. 7068" SEWER
EX. 7080" WATER
EX. 7080" SEWER
EX. 7092" WATER
EX. 7092" SEWER
EX. 7104" WATER
EX. 7104" SEWER
EX. 7116" WATER
EX. 7116" SEWER
EX. 7128" WATER
EX. 7128" SEWER
EX. 7140" WATER
EX. 7140" SEWER
EX. 7152" WATER
EX. 7152" SEWER
EX. 7164" WATER
EX. 7164" SEWER
EX. 7176" WATER
EX. 7176" SEWER
EX. 7188" WATER
EX. 7188" SEWER
EX. 7200" WATER
EX. 7200" SEWER
EX. 7212" WATER
EX. 7212" SEWER
EX. 7224" WATER
EX. 7224" SEWER
EX. 7236" WATER
EX. 7236" SEWER
EX. 7248" WATER
EX. 7248" SEWER
EX. 7260" WATER
EX. 7260" SEWER
EX. 7272" WATER
EX. 7272" SEWER
EX. 7284" WATER
EX. 7284" SEWER
EX. 7296" WATER
EX. 7296" SEWER
EX. 7308" WATER
EX. 7308" SEWER
EX. 7320" WATER
EX. 7320" SEWER
EX. 7332" WATER
EX. 7332" SEWER
EX. 7344" WATER
EX. 7344" SEWER
EX. 7356" WATER
EX. 7356" SEWER
EX. 7368" WATER
EX. 7368" SEWER
EX. 7380" WATER
EX. 7380" SEWER
EX. 7392" WATER
EX. 7392" SEWER
EX. 7404" WATER
EX. 7404" SEWER
EX. 7416" WATER
EX. 7416" SEWER
EX. 7428" WATER
EX. 7428" SEWER
EX. 7440" WATER
EX. 7440" SEWER
EX. 7452" WATER
EX. 7452" SEWER
EX. 7464" WATER
EX. 7464" SEWER
EX. 7476" WATER
EX. 7476" SEWER
EX. 7488" WATER
EX. 7488" SEWER
EX. 7500" WATER
EX. 7500" SEWER
EX. 7512" WATER
EX. 7512" SEWER
EX. 7524" WATER
EX. 7524" SEWER
EX. 7536" WATER
EX. 7536" SEWER
EX. 7548" WATER
EX. 7548" SEWER
EX. 7560" WATER
EX. 7560" SEWER
EX. 7572" WATER
EX. 7572" SEWER
EX. 7584" WATER
EX. 7584" SEWER
EX. 7596" WATER
EX. 7596" SEWER
EX. 7608" WATER
EX. 7608" SEWER
EX. 7620" WATER
EX. 7620" SEWER
EX. 7632" WATER
EX. 7632" SEWER
EX. 7644" W

B-4-2 STANDARDS AND SPECIFICATIONS FOR SOIL PREPARATION, TOPSOILING, AND SOIL AMENDMENTS

DEFINITION
THE PROCESS OF PREPARING THE SOILS TO SUSTAIN ADEQUATE VEGETATIVE STABILIZATION.

PURPOSE
TO PROVIDE A SUITABLE SOIL MEDIUM FOR VEGETATIVE GROWTH

CONDITIONS WHERE PRACTICE APPLIES
WHERE VEGETATIVE STABILIZATION IS TO BE ESTABLISHED.

CRITERIA
A. SOIL PREPARATION
1. TEMPORARY STABILIZATION
a. SEEDBED PREPARATION CONSISTS OF LOOSENING TO A DEPTH OF 3 TO 5 INCHES BY MEANS OF SUITABLE AGRICULTURAL OR CONSTRUCTION EQUIPMENT. SUCH AS DISC HARROWS OR CHISEL PLOWS OR RIPPERS MOUNTED ON CONSTRUCTION EQUIPMENT. AFTER THE SOIL IS LOOSENED, IT MUST NOT BE ROLLED OR DRAGGED SMOOTH BUT LEFT IN THE ROUGHENED CONDITION. SLOPES 3:1 OR FLATTER ARE TO BE TRACKED WITH RIDGES RUNNING PARALLEL TO THE CONTOUR OF THE SLOPE.
b. APPLY FERTILIZER AND LIME AS PRESCRIBED ON THE PLANS.
c. INCORPORATE LIME AND FERTILIZER INTO THE TOP 3 TO 5 INCHES OF SOIL BY DISKING OR OTHER SUITABLE MEANS.
2. PERMANENT STABILIZATION
a. A SOIL TEST IS REQUIRED FOR ANY EARTH DISTURBANCE OF 5 ACRES OR MORE. THE MINIMUM SOIL CONDITIONS REQUIRED FOR PERMANENT VEGETATIVE ESTABLISHMENT ARE:
I. SOIL PH BETWEEN 6.5 AND 7.5.
IV. SOLUBLE SALTS TO LESS THAN 500 PARTS PER MILLION (PPM)
III. SOIL CONTAINS LESS THAN 40 PERCENT CLAY BUT ENOUGH FINE GRAVEL MATERIAL (GRADATION SIMILAR TO PERCENT SILT PLUS CLAY) TO PROVIDE THE CAPACITY TO HOLD A MODERATE AMOUNT OF MOISTURE. AN EXCEPTION: IF LOW/GRASS WILL BE PLANTED, THEN A SANDY SOIL (LESS THAN 5 PERCENT BY WEIGHT PASSING THE #200 SIEVE) MAY BE ACCEPTABLE.
IV. SOIL CONTAINS 1.5 PERCENT MINERALS ORGANIC MATTER BY WEIGHT.
V. SOIL CONTAINS SUFFICIENT PORE SPACE TO PERMIT ADEQUATE ROOT PENETRATION.
b. APPLICATION OF AMENDMENTS OR TOPSOIL IS REQUIRED IF ON-SITE SOILS DO NOT MEET THE ABOVE CONDITIONS.
c. GRADED AREAS MUST BE MAINTAINED IN A TRUE AND EVEN GRADE AS SPECIFIED ON THE APPROVED PLAN. THEN LOOSENED OR OTHERWISE LOOSENED TO A DEPTH OF 3 TO 5 INCHES.
d. APPLY SOIL AMENDMENTS AS SPECIFIED ON THE APPROVED PLAN OR AS INDICATED BY THE RESULTS OF A SOIL TEST.
e. MIX SOIL AMENDMENTS INTO THE TOP 3 TO 5 INCHES OF SOIL BY DISKING OR OTHER SUITABLE MEANS. RAKE LAWN AREAS TO SMOOTH THE SURFACE, REMOVE LARGE OBJECTS LIKE STONES AND BRANCHES, AND BRING THE AREA FOR SEED APPLICATION. LOOSE THE SURFACE SOIL BY DRAGGING WITH A HEAVY CHAIN OR OTHER EQUIPMENT TO ROUGHEN THE SURFACE WHERE SITE CONDITIONS WILL NOT PERMIT NORMAL SEEDBED PREPARATION. TRACK SLOPES 3:1 OR FLATTER WITH TRACKED EQUIPMENT LEAVING THE SOIL IN AN IRREGULAR CONDITION WITH RIDGES RUNNING PARALLEL TO THE CONTOUR OF THE SLOPE. LEAVE THE SURFACE OF THE FINAL SOIL LOOSE AND FRIABLE. SECORED LOGGING MAY BE UNNECESSARY ON NEWLY DISTURBED AREAS.

B. TOPSOILING
I. TOPSOIL IS PLACED OVER PREPARED SUBSOIL PRIOR TO ESTABLISHMENT OF PERMANENT VEGETATION. THE PURPOSE IS TO PROVIDE A SUITABLE SOIL MEDIUM FOR VEGETATIVE GROWTH. SOILS OF CONSERVATION HAVE SIGNIFICANTLY LOWER LIMITING LEVELS II. LOW PH, MATERIALS TO HIC TO PLANTS, AND/OR UNACCEPTABLE SOIL GRADATION.
II. TOPSOIL SALVAGED FROM AN EXISTING SITE MAY BE USED PROVIDED IT MEETS THE STANDARDS AS SET FORTH IN THESE SPECIFICATIONS. TYPICALLY, THE DEPTH OF TOPSOIL TO BE SALVAGED FOR A GIVEN SOIL TYPE CAN BE FOUND IN THE REPRESENTATIVE SOIL PROFILE DESCRIPTION IN THE SOIL SURVEY PUBLISHED BY USDA-NRCS.
III. TOPSOIL MUST BE LIMITED TO AREAS HAVING 2:1 OR FLATTER SLOPES WHERE:
a. THE TEXTURE OF THE EXPOSED SUBSOIL/PARENT MATERIAL IS NOT ADEQUATE TO PRODUCE VEGETATIVE GROWTH.
b. THE SOIL MATERIAL IS SO SHALLOW THAT THE ROOTING ZONE IS NOT DEEP ENOUGH TO SUPPORT PLANTS. OR FINISH GRADING SURFACE OF BEDROCK, STONY SOILS OR INFERTILE SOILS.
c. THE OPPOSING, SOIL TO BE VEGETATED CONTAINS MATERIAL TOXIC TO PLANT GROWTH.
d. THE SOIL IS SO ACIDIC THAT TREATMENT WITH LIMESTONE IS NOT FEASIBLE.
IV. AREAS HAVING SLOPES STEEPER THAN 2:1 REQUIRE SPECIAL CONSIDERATION AND DESIGN.
V. TOPSOIL SPECIFICATIONS. SOIL TO BE USED AS TOPSOIL MUST MEET THE FOLLOWING CRITERIA
a. TOPSOIL MUST BE A LOAM, SANDY LOAM, CLAY LOAM, SILT LOAM, SANDY CLAY LOAM, OR LOAMY SAND. OTHER MAY BE USED IF RECOMMENDED BY AN AGRONOMIST OR SOIL SCIENTIST AND APPROVED BY THE APPROPRIATE APPROVAL AUTHORITY. TOPSOIL MUST NOT BE A MIXTURE OF CONTRASTING TEXTURED SUBSOILS AND MUST CONTAIN LESS THAN 5 PERCENT BY VOLUME OF CINDERS, STONES, SLAG, COARSE FRAGMENTS, GRAVEL, STICKS, ROOTS, TRASH, OR OTHER MATERIALS LARGER THAN 1½ INCHES IN DIAMETER.
b. TOPSOIL MUST BE FREE OF NOXIOUS PLANTS OR PLANT PARTS SUCH AS BERMUDA GRASS, QUACK GRASS, JOHNSON GRASS, MUT GRASS, THISTLE, OR OTHERS AS SPECIFIED.
c. TOPSOIL SUBSTITUTES OR AMENDMENTS, AS RECOMMENDED BY A QUALIFIED AGRONOMIST OR SOIL SCIENTIST AND APPROVED BY THE APPROPRIATE APPROVAL AUTHORITY, MAY BE USED IN LIEU OF NATURAL TOPSOIL.
VI. TOPSOIL APPLICATION
a. EROSION AND SEDIMENT CONTROL PRACTICES MUST BE MAINTAINED WHEN APPLYING TOPSOIL.
b. UNIFORMLY DISTRIBUTE TOPSOIL IN A MINIMUM 4 INCH LAYER AND COMPACT TO A MINIMUM THICKNESS OF 4 INCHES. SPREADING IS TO BE PERFORMED IN SUCH A MANNER THAT SODDING OR SEEDING CAN PROCEED WITH A MINIMUM OF ADDITIONAL SOIL PREPARATION. REMOVE ANY IRREGULARITIES IN THE SURFACE RESULTING FROM TOPSOILING OR OTHER OPERATIONS SUCH AS DEPRESSIONS OR WATER POCKETS.
c. TOPSOIL MUST NOT BE PLACED IF THE TOPSOIL OR SUBSOIL IS IN A FROZEN OR MUDDY CONDITION, WHEN THE SUBSOIL IS EXCESSIVELY WET OR IN A CONDITION THAT MAY OTHERWISE BE DETRIMENTAL TO PROPER GRADING AND SEEDBED PREPARATION.

C. SOIL AMENDMENTS (FERTILIZER AND LIME SPECIFICATIONS)
I. SOIL TESTS MUST BE PERFORMED TO DETERMINE THE EXACT RATIOS AND APPLICATION RATES FOR BOTH LIME AND FERTILIZER ON SITES HAVING DISTURBED AREAS OF 5 ACRES OR MORE. SOIL ANALYSIS MAY BE PERFORMED BY A RECOGNIZED PRIVATE OR PUBLIC SOIL TESTING LABORATORY. SOIL SAMPLES TAKEN FOR ENGINEERING PURPOSES MAY ALSO BE USED FOR CHEMICAL ANALYSES.
II. FERTILIZERS MUST BE UNIFORM IN COMPOSITION, FREE FLOWING AND SUITABLE FOR ACCURATE APPLICATION BY APPROPRIATE EQUIPMENT. MANURE MAY BE SUBSTITUTED ON A FERTILIZER WITH PRIOR APPROVAL FROM THE APPROPRIATE APPROVAL AUTHORITY. FERTILIZERS MUST ALL BE DELIVERED TO THE SITE FULLY LABELED ACCORDING TO THE APPLICABLE LAWS AND MUST BEAR THE NAME, TRADE NAME OR TRADEMARK AND WARRANTY OF THE MANUFACTURER.
III. LIME MATERIALS MUST BE GROUND LIMESTONE (HYDRATED OR BURNT LIME MAY BE SUBSTITUTED EXCEPT WHEN HYDROSEEDING) WHICH CONTAINS AT LEAST 50 PERCENT TOTAL OXIDES (CALCIUM OXIDE PLUS MAGNESIUM OXIDE). LIMESTONE MUST BE GROUND TO SUCH FINENESS THAT AT LEAST 50 PERCENT WILL PASS THROUGH A #100 MESH SIEVE AND 90 TO 100 PERCENT WILL PASS THROUGH A #20 MESH SIEVE.
IV. LIME AND FERTILIZER ARE TO BE EVENLY DISTRIBUTED AND INCORPORATED INTO THE TOP 3 TO 5 INCHES OF SOIL BY DISKING OR OTHER SUITABLE MEANS.
V. WHERE THE SUBSOIL IS EITHER HIGHLY ACIDIC OR COMPOSED OF HEAVY CLAYS, SPREAD GROUND LIMESTONE AT THE RATE OF A TO 8 TONS/ACRE (200-400 POUNDS PER 1,000 SQUARE FEET) PRIOR TO THE PLACEMENT OF TOPSOIL.

TABLE B-1: TEMPORARY SEEDING FOR SITE STABILIZATION

PLANT SPECIES	SEEDING RATE		SEEDING DEPTH	RECOMMENDED SEEDING DATES BY PLANT HARDINESS ZONE
	LB/AC	LB/1000 FT²	(INCHES)	6b & 6a	7a & 7b
ANNUAL RYEGRASS	40	1.0	0.5	MARCH 18 TO MAY 31 AUG 1 TO SEP 28	MARCH 1 TO MAY 15 AUG 15 TO OCT 15
BARLEY (FOWLER RUSSIAN)	96	2.2	1.5	MARCH 18 TO MAY 31 AUG 1 TO SEP 30	MARCH 1 TO MAY 15 AUG 1 TO OCT 15
OATS (VARIATION)	72	1.7	1.0	MARCH 18 TO MAY 31 AUG 1 TO SEP 30	MARCH 1 TO MAY 15 AUG 1 TO OCT 15
WHEAT (WINTER) (VARIOUS)	120	2.8	1.5	MARCH 18 TO MAY 31 AUG 1 TO SEP 30	MARCH 1 TO MAY 15 AUG 15 TO NOV 30
PERENNIAL RYE (GULF & EXPRESS)	112	2.6	1.0	MARCH 18 TO MAY 31 AUG 1 TO DEC 15	FEB 15 TO APR 30 AUG 15 TO DEC 15
WARM SEASON GRASSES					
PUNTA, MILLET (BROOMCORN)	30	0.7	0.5	JUN 1 TO JUL 31	MAY 15 TO JUL 31
PEARL MILLET (ANNUAL) (VARIATION)	25	0.5	0.5	JUN 1 TO JUL 31	MAY 15 TO AUG 15
SUDANGRASS (HYBRIDS) (COMMON)	40	0.9	1.0	JUN 1 TO JUL 31	MAY 15 TO AUG 15

NOTES:
1. SEEDING RATES TO THE RIGHT EQUALS GRASSES ARE IN POUNDS OF PURE LIVE SEED (PLS). ACTUAL PLANTING RATES IN MAY BE ADJUSTED TO REFLECT RELATIVE SEED GERMINATION AND PURITY. AS TESTED. AS SUBSTITUTE ARE USUALLY NOT ORDERED FOR THE COOL SEASON GRASSES. SEEDING RATES ARE FOR TEMPORARY SEEDINGS, GIVEN PLANTED ALONE. WHEN PLANTED AS A NURSE CROP WITH PERMANENT SEED MIXES, USE ½ OF THE SEEDING RATES LISTED ABOVE. FOR QUALITY, DATE, AND WEIGHT. FOR SMALLER-SEEDED GRASSES (ANNUAL RYEGRASS, BARLEY, OATS, WHEAT, AND MILLETS), THE SEEDING DEPTH MAY BE INCREASED BY UP TO 1 INCH ON SANDY SOILS.
2. SEEDING DATES TO THE LEFT ARE FOR THE MIDDLE OF THE RECOMMENDED RANGE. PLANTING DATES FOR OTHER TEMPORARY GRASSES MAY BE SUBSTITUTED ON FAVORABLE SITES. FALL SEEDING FOR SPRING GROWTH OF PERENNIAL GRASSES CEASES THE DATE WHEN TEMPORARY DECEMBER CEASES. THE DATE WHEN THE PROFITABLE YIELD DOES NOT JUSTIFY THE COST. SEED GERMINATION AND GROWTH OF OTHER PLANTS. IF MUST BE USED AS A NURSE CROP, SEEDING AT ½ OF THE RATES LISTED ABOVE. OATS ARE THE RECOMMENDED NURSE CROP FOR MARCH SEEDINGS.
3. FOR SUMMER PLANT SEEDS AT TWICE THE DEPTH LISTED ABOVE.
4. THE PLANTING RATES LISTED ARE AVERAGES FOR EACH ZONE, AND MAY REQUIRE ADJUSTMENT TO APPLY TO LOCAL CONDITIONS, ESPECIALLY WHEN THE BOUNDARIES OF THE ZONE.

*THIS SITE LIES WITHIN U.S.D.A. PLANT HARDINESS ZONE 6B.

TABLE B.5 RECOMMENDED PLANTING DATES FOR PERMANENT COVER IN MARYLAND

TYPE OF PLANT MATERIAL	PLANT HARDINESS ZONES	
	6b & 6a	7a & 7b
SEEDS - COOL SEASON GRASSES (INCLUDES MIXES WITH SHRUBS AND/OR LEGUMES)	MAR 15 TO MAY 31 AUG 1 TO SEP 30	MAR 1 TO MAY 15 AUG 1 TO OCT 15
SEEDS - WARM SEASON COOL SEASON GRASSES MIXED (INCLUDES MIXES WITH SHRUBS AND/OR LEGUMES)	MAR 15 TO MAY 31 JUN 1 TO JUL 31*	MAR 1 TO MAY 15 MAY 15 TO JUL 31*
SEEDS - LEGUMES	MAR 15 TO MAY 31 JUN 1 TO AUG 31*	FEB 15 TO APR 30 MAY 15 TO SEP 15*
SEEDS - FLEX SEASON	MAR 15 TO MAY 31 JUN 1 TO AUG 31* SEP 15 TO NOV 15*	FEB 15 TO APR 30 MAY 1 TO SEP 30* OCT 1 TO DEC 15*
UNROOTED WOODY MATERIALS, BARE ROOT PLANTS, BULBS, RHIZOMES, CORMS AND TUBERS*	MARCH 15 TO MAY 31 JUN 1 TO JUN 30*	FEB 15 TO APR 30 MAY 15 TO JUN 30*
CONTAINERIZED WOODY PLANTS	MAR 15 TO MAY 31 JUN 1 TO AUG 31* SEP 1 TO NOV 15*	MAR 1 TO MAY 15 MAY 15 TO JUN 30* SEP 1 TO NOV 15*

NOTES:
1. FOR PLANTING DATES LISTED AND MARKED FOR MARYLAND, THESE DATES MAY REQUIRE VALIDATION TO REFLECT LOCAL CONDITIONS, ESPECIALLY SOIL MOISTURE AT THE TIME OF PLANTING AND TEMPERATURE. IF SOIL TEMPERATURES ARE COOLER THAN 50 DEGREES, OR MOISTURE IS NOT ADEQUATE, THE ACRES WILL REMAIN DORMANT UNTIL CONDITIONS ARE FAVORABLE. PLEASE CALL YOUR LOCAL COUNTY EXTENSION OFFICE FOR MORE TIMELY GUIDANCE WHEN PLANTING OUTSIDE OF THESE DATES.
2. WHEN PLANTING OUTSIDE OF RECOMMENDED SEASONS, MOST OF THESE MATERIALS MUST BE PURCHASED AND KEPT IN A DORMANT CONDITION UNTIL PLANTING TIME. MOST SHRUBS AND TREES ARE BALLED AND BURLAPPED (B&B) OR CONTAINERIZED (CONTAINER). THEY MAY BE SUPPLIED AS DEPENDING ON MARKET AVAILABILITY.
3. ADDITIONAL PLANTING DATES FOR THE USE OF ESSENTIAL PLANTS, DEPENDING ON ANNUAL RAINFALL AND TEMPERATURE, ENCOURAGED ACROSS A RANGE OVER AN EXTENDED PERIOD. IN MARYLAND DURING THIS PERIOD:
a. WARM PLANTS (GROWING IN SOUTHERN REGIONS) MOST OF THESE MATERIALS MUST BE PURCHASED AND KEPT IN A DORMANT CONDITION UNTIL PLANTING TIME. MOST ARE BALLED AND BURLAPPED (B&B) OR CONTAINERIZED (CONTAINER). THEY MAY BE SUPPLIED AS DEPENDING ON MARKET AVAILABILITY.
b. ADDITIONAL PLANTING DATES FOR THE USE OF ESSENTIAL PLANTS, DEPENDING ON ANNUAL RAINFALL AND TEMPERATURE, ENCOURAGED ACROSS A RANGE OVER AN EXTENDED PERIOD. IN MARYLAND DURING THIS PERIOD:
c. IN WARM SEASON GRASSES, NEED A SOIL TEMPERATURE OF AT LEAST 50 DEGREES F IN ORDER TO GERMINATE. IF SOIL TEMPERATURES ARE COOLER THAN 50 DEGREES, OR MOISTURE IS NOT ADEQUATE, THE ACRES WILL REMAIN DORMANT UNTIL CONDITIONS ARE FAVORABLE. PLEASE CALL YOUR LOCAL COUNTY EXTENSION OFFICE FOR MORE TIMELY GUIDANCE WHEN PLANTING OUTSIDE OF THESE DATES.
d. ADDITIONAL PLANTING DATES DURING OTHER SUPPLEMENTAL NURTURING MAY BE NEEDED TO ENSURE PLANT ESTABLISHMENT.
e. MEDIUM TO PREFERRED AND THINNED OUT AS NEEDED TO ENSURE ADEQUATE PLANTED PLANTS. PLANTS THAT GROW BUT ARE INSUFFICIENTLY ROOTED IN PLACE, SUSCEPTIBLE NEEDED A FEW WEEKS TO BECOME SUFFICIENTLY ROOTED. LIVING CONTAINERIZED AND BALLED AND BURLAPPED STOCK MAY BE PLANTED INTO THE WARMER MONTHS AS LONG AS THE GROUND IS NOT FROZEN AND SOIL MOISTURE IS ADEQUATE

THIS DEVELOPMENT PLAN IS APPROVED FOR SOIL EROSION AND SEDIMENT CONTROL BY THE HOWARD SOIL CONSERVATION DISTRICT

Alexander Brodie — HOWARD SCD — DATE 8/4/2020

ENGINEER'S CERTIFICATE

"I CERTIFY THAT THIS PLAN FOR SEDIMENT AND EROSION CONTROL REPRESENTS A PRACTICAL AND WORKABLE PLAN BASED ON MY PERSONAL KNOWLEDGE OF THE SITE CONDITIONS AND THAT IT WAS PREPARED IN ACCORDANCE WITH THE REQUIREMENTS OF THE HOWARD SOIL CONSERVATION DISTRICT."

SIGNATURE OF ENGINEER — PAUL M. SILL, P.E. — DATE 8/4/20

DEVELOPER'S CERTIFICATE

"I/WE CERTIFY THAT ALL DEVELOPMENT AND CONSTRUCTION WILL BE DONE ACCORDING TO THIS PLAN FOR SEDIMENT AND EROSION CONTROL, AND THAT ALL RESPONSIBLE PERSONNEL INVOLVED IN THE CONSTRUCTION PROJECT WILL HAVE A CERTIFICATE OF ATTENDANCE AT A DEPARTMENT OF THE ENVIRONMENT APPROVED TRAINING PROGRAM FOR THE CONTROL OF SEDIMENT AND EROSION BEFORE BEGINNING THE PROJECT. I ALSO AUTHORIZE PERIODIC ON-SITE INSPECTION BY THE HOWARD SOIL CONSERVATION DISTRICT PERSONNEL."

SIGNATURE OF DEVELOPER — Mark P. Mona — DATE 12/8/20

B-4-3 STANDARDS AND SPECIFICATIONS FOR SEEDING AND MULCHING

DEFINITION
THE APPLICATION OF SEED AND MULCH TO ESTABLISH VEGETATIVE COVER.

PURPOSE
TO PROTECT DISTURBED SOILS FROM EROSION DURING AND AT THE END OF CONSTRUCTION

CONDITIONS WHERE PRACTICE APPLIES
TO THE SURFACE OF ALL TERRESTRIAL CUT/FILL SLOPES, AND ANY DISTURBED AREA NOT UNDER ACTIVE GRADING

CRITERIA
A. SEEDING
1. SPECIFICATIONS
a. ALL SEED MUST MEET THE REQUIREMENTS OF THE MARYLAND STATE SEED LAW. ALL SEED MUST BE SUBJECT TO TESTING BEFORE IT IS ACCEPTED. A SEED ANALYSIS MUST HAVE BEEN TESTED WITHIN THE 9 MONTHS IMMEDIATELY PRECEDING THE DATE OF SOWING SUCH MATERIAL ON ANY PROJECT. EACH BAG OF SEED SHALL BE IDENTIFIED AS TO THE QUALITY OF SEED. SEED TAGS MUST BE AVAILABLE UPON REQUEST TO THE INSPECTOR TO VERIFY TYPE OF SEED AND SEEDING RATE.
b. MULCH ALONE SHALL NOT BE USED FOR SEEDING DATES ONLY AS INDICATED BELOW. SEEDING DATES MAY BE EXTENDED IF THE GROUND IS FROZEN. THE APPROPRIATE SEEDING MIXTURE MUST BE APPLIED WHEN THE GROUND THAWS.
c. INOCULANTS: THE INOCULANT FOR TREATING LEGUME SEED IN THE SEED MIXTURES MUST BE A PURE CULTURE OF NITROGEN FIXING BACTERIA PREPARED SPECIFICALLY FOR THE SPECIES. INOCULANTS MUST NOT BE USED LATER THAN THE DATE INDICATED ON THE CONTAINER. ADD FRESH INOCULANTS AS DIRECTED IN THE PACKAGE. USE POUR TIMES THE RECOMMENDED RATE WHEN HYDROSEEDING. NOTE: IT IS VERY IMPORTANT TO KEEP INOCULANT AS COOL AS POSSIBLE UNTIL USED. TEMPERATURES ABOVE 70 TO 80 DEGREES FAHRENHEIT CAN KILL OR SEVERELY REDUCE AND MAKE THE INOCULANT LESS EFFECTIVE.
d. SEED ON DISTURBED AREAS PLACED ON SOIL WHICH HAS BEEN TREATED WITH SOIL STERILANTS OR CHEMICALS USED FOR WEED CONTROL UNTIL SUFFICIENT TIME HAS ELAPSED (14 DAYS MIN.) TO PERMIT GERMINATION OF THE PLANT MATERIALS.
2. APPLICATION
a. SEED MIXING - THIS INCLUDES USE OF CONVENTIONAL DROP OR BROADCAST SPREADERS.
I. INCORPORATE SEED INTO THE SUBSOIL AT THE RATES PRESCRIBED ON TEMPORARY SEEDING TABLE B-1. WHERE SEEDING DATES DO NOT FALL WITHIN THE SPECIFIED DATES, SEED MAY BE APPLIED IN TWO DIRECTIONS, PERPENDICULAR TO EACH OTHER. APPLY HALF THE SEEDING RATE IN EACH DIRECTION. ROLL THE SEEDED AREAS WITH A CULTIPACKER ROLLER TO PROVIDE GOOD SEED TO SOIL CONTACT.
b. ROLL OR CULTIPACK SEEDED AREAS. RECOMMENDED SEEDERS THAT APPLY SEED AND PACK SEED IN ONE OPERATION ARE USED WHERE SITE AND SEED MIXTURE PERMIT. SEED MUST BE PLACED AT A DEPTH AS TO PROVIDE
II. CULTIPACKING SEEDER - SEEDS ARE PLACED IN FURROWS AND COMPACTED BY SOIL COVERING. SEEDBED MUST BE FIRM AFTER PLANTING.
III. ROLLER-TYPE SEEDERS - SERRATED DISCS PERPENDICULAR TO EACH OTHER. APPLY HALF THE SEEDING RATE IN EACH DIRECTION.
IV. HYDRAULIC SEEDERS - APPLY SEED AND FERTILIZER SLURRY. INCLUDES SEED AND FERTILIZER.
I. IF FERTILIZER IS BEING APPLIED AT THE TIME OF SEEDING, THE APPLICATION RATE SHOULD NOT EXCEED THE FOLLOWING: NITROGEN, 100 POUNDS PER ACRE; TOTAL OF SOLUBLE NITROGEN; POTASH (POTASSIUM OXIDE), 200 POUNDS PER ACRE; NOT TO STRAW OR MULCHES PER ACRE.
II. LIME. USE ONLY GROUND AGRICULTURAL LIMESTONE (SAT TO 3 TONS PER ACRE USE MAY BE APPLIED WITH HYDROSEEDING MIXTURES. MUST USE THREE TIMES THE APPLICATION RATE. IF AT ANY ONE TIME, DO NOT USE BURNT OR HYDRATED LIME WHEN HYDROSEEDING.
III. SEED AND FERTILIZER MUST BE APPLIED WITHIN 24 HOURS AND WITHOUT INTERRUPTION.
IV. WHEN HYDROSEEDING DO NOT INCORPORATE SEED INTO THE SOIL.

B. MULCHING
1. MULCH MATERIALS (IN ORDER OF PREFERENCE)
I. STRAW CONSISTING OF THE THRESHING OF WINTER WHEAT, RYE, OAT, OR BARLEY AND REASONABLY BRIGHT IN COLOR. STRAW IS TO BE FREE OF NOXIOUS WEED SEEDS AS SPECIFIED IN THE MARYLAND REGULATIONS FOR SEED ANALYSIS. NOTE: USE ONLY CLEAN, SEED-FREE STRAW. USE ONLY STERILE STRAW MULCH IN AREAS WHERE ONE SPECIES OF GRASS IS DESIRED.
II. WOOD CELLULOSE FIBER MULCH (INITIAL CONSISTING OF SPECIALLY PROCESSED WOOD CELLULOSE PROCESSED INTO A UNIFORM FIBROUS PHYSICAL STATE.
I. (NOW IS TO BE USED) IS GIVEN OR CONTAIN A GREEN DYE IN THE PACKAGE THAT WILL PROVIDE AN APPROPRIATE COLOR TO FACILITATE VISUAL INSPECTION OF THE UNIFORMLY SPREAD SLURRY
II. WHEN APPLIED THIS MUST CONTAIN NO GERMINATION OR GROWTH-INHIBITING FACTORS.
III. (HIGH MIXED-FIBER, TO BE SHARP ACTION OF AND PROCESSED IN SUCH A MANNER THAT THE WOOD CELLULOSE FIBERS WILL FORM A HOMOGENEOUS SUSPENSION WITH WATER. THEY HAVE A CAPABILITY AND WILL BLEND WITH SEED, FERTILIZER AND OTHER ADDITIVES TO FORM A HOMOGENEOUS SLURRY. THE MULCH MATERIAL MUST FORM A DOTTED-LIKE GROUND COVER, ON APPLICATION, HAVING MOISTURE ABSORPTION AND PERCOLATION PROPERTIES AND MUST COVER AND HOLD GRASS SEED IN CONTACT WITH THE SOIL WHEN APPLIED AT THE RECOMMENDED RATES OF THE GRASS SEEDLINGS.
IV. MUCH MATERIALS MUST NOT CONTAIN ELEMENTS OR COMPOUNDS AT CONCENTRATION LEVELS THAT WILL BE PHYTO-TOXIC.
V. MUCH MUST CONFORM TO THE FOLLOWING PHYSICAL REQUIREMENTS: FIBER LENGTH OF APPROXIMATELY 10 MILLIMETERS, DIAMETER APPROXIMATELY 1 MILLIMETER, PH RANGE OF 4.0 TO 8.5, ASH CONTENT OF 1.8 PERCENT MAXIMUM AND WATER-HOLDING CAPACITY OF 80 PERCENT MINIMUM.
2. APPLICATION
a. APPLY MULCH TO ALL SEEDED AREAS IMMEDIATELY AFTER SEEDING.
b. WHEN STRAW MULCH IS USED, SPREAD IT EVENLY AT A RATE ASSURING THAT THE RATE OF 2 TONS PER ACRE TO A UNIFORM LOOSE DEPTH OF 1 TO 2 INCHES. APPLY MULCH TO ACHIEVE A UNIFORM DISTRIBUTION OF COVER. USE MAY BE USED FOR ANCHORING STRAW. APPLY THE FOAM BINDER AT A RATE OF 5 GALLONS PER 1,000 SQUARE FEET. MIX THE WOOD CELLULOSE FIBER WITH WATER AT A RATE OF 50 POUNDS PER 100 GALLONS OF WATER.
c. WHEN HYDROSEEDING, THE WOOD CELLULOSE FIBER MULCH MAY BE APPLIED AT A MINIMUM WEIGHT OF 1,500 POUNDS PER ACRE. MIX THE WOOD CELLULOSE FIBER WITH WATER TO ATTAIN A MIXTURE WITH A MINIMUM OF 500 POUNDS OF WOOD CELLULOSE FIBER PER 100 GALLONS OF WATER.

3. ANCHORING
a. PERFORM MULCH ANCHORING IMMEDIATELY FOLLOWING APPLICATION OF MULCH TO MINIMIZE LOSS OF MULCH BY WIND. ANCHORING MAY BE DONE BY ONE OF THE FOLLOWING METHODS (OR EQUIVALENT), DEPENDING UPON THE SIZE OF THE AREA AND EROSION HAZARD:
I. A MULCH ANCHORING TOOL IS A TRACTOR-DRAWN IMPLEMENT DESIGNED TO PUNCH AND ANCHOR MULCH INTO THE SOIL SURFACE A MINIMUM OF 2 INCHES. THIS PRACTICE IS MOST EFFECTIVE ON LARGE AREAS AND IS LIMITED TO FLATTER SLOPES WHERE EQUIPMENT CAN OPERATE SAFELY. IF USED ON SLOPING LAND, THIS PRACTICE SHOULD FOLLOW THE CONTOUR.
II. FOOD CELLULOSE FIBER MAY BE USED FOR ANCHORING STRAW. APPLY THE FOAM BINDER AT A RATE OF 5 GALLONS PER 1,000 SQUARE FEET. MIX THE WOOD CELLULOSE FIBER WITH WATER AT A RATE OF 50 POUNDS PER 100 GALLONS OF WATER. DO NOT OVER-AGITATE THE SLURRY.
III. SYNTHETIC BINDERS, SUCH AS ACRYLIC DY (HARO TACK), DCA-70, PETROSET, TERRA TAX II, TERRA TACK AR OR OTHER APPROVED EQUAL MAY BE USED. FOLLOW MANUFACTURER RATES AS SPECIFIED BY THE MANUFACTURER. APPLICATION OF LIQUID BINDERS NEEDS TO BE HEAVIER AT EDGES, WHERE WIND CATCHES MULCH, SUCH AS IN VALLEYS AND ON CREESTS OF RIDGES. USE RATES OF ASPHALT BINDERS IS STRICTLY PROHIBITED.
IV. LIGHTWEIGHT PLASTIC NETTING MAY BE STAPLED OVER THE MULCH ACCORDING TO MANUFACTURER RECOMMENDATIONS. NETTING IS USUALLY AVAILABLE IN ROLLS 4 TO 15 FEET WIDE AND 300 TO 2,000 FEET LONG.

B-4-4 STANDARDS AND SPECIFICATIONS FOR TEMPORARY STABILIZATION

DEFINITION
TO STABILIZE DISTURBED SOILS WITH VEGETATION FOR UP TO 6 MONTHS.

PURPOSE
TO USE FAST GROWING VEGETATION THAT PROVIDES COVER ON DISTURBED SOILS.

CONDITIONS WHERE PRACTICE APPLIES
EXPOSED SOILS WHERE GROUND COVER IS NEEDED FOR A PERIOD OF 6 MONTHS OR LESS. FOR LONGER DURATION OF TIME, SOME OTHER STABILIZATION PRACTICES ARE REQUIRED.

CRITERIA
I. SELECT ONE OR MORE OF THE SPECIES OR SEED MIXTURES LISTED IN TABLE B-1 FOR THE APPROPRIATE PLANT HARDINESS ZONE FROM B-5. SELECT SPECIES FROM THE TEMPORARY SEEDING SECTION ONLY. IN APPLICATION RATES, SEEDING DATES AND SEEDING DEPTHS. IF THIS SUMMARY IS NOT PUT ON THE PLAN AND COMPLETED, EITHER TABLE B-1 FOR FERTILIZER AND LIME RATES SHALL BE PUT ON THE PLAN.
II. FOR SMALL NURSERY SOIL TESTS PERFORMED, USE AND SHOW THE RECOMMENDED RATES BY THE TESTING AGENCY. SOIL TESTS ARE NOT REQUIRED FOR TEMPORARY SEEDING.
III. WHEN STABILIZATION IS REQUIRED OUTSIDE OF A MOWING SEASON, APPLY SEED AND MULCH (IN SPRING MULCH ALONE AS PRESCRIBED IN SECTION B-4-3 & 3 B) AND MONITOR UNTIL THE NEXT SEEDING SEASON.

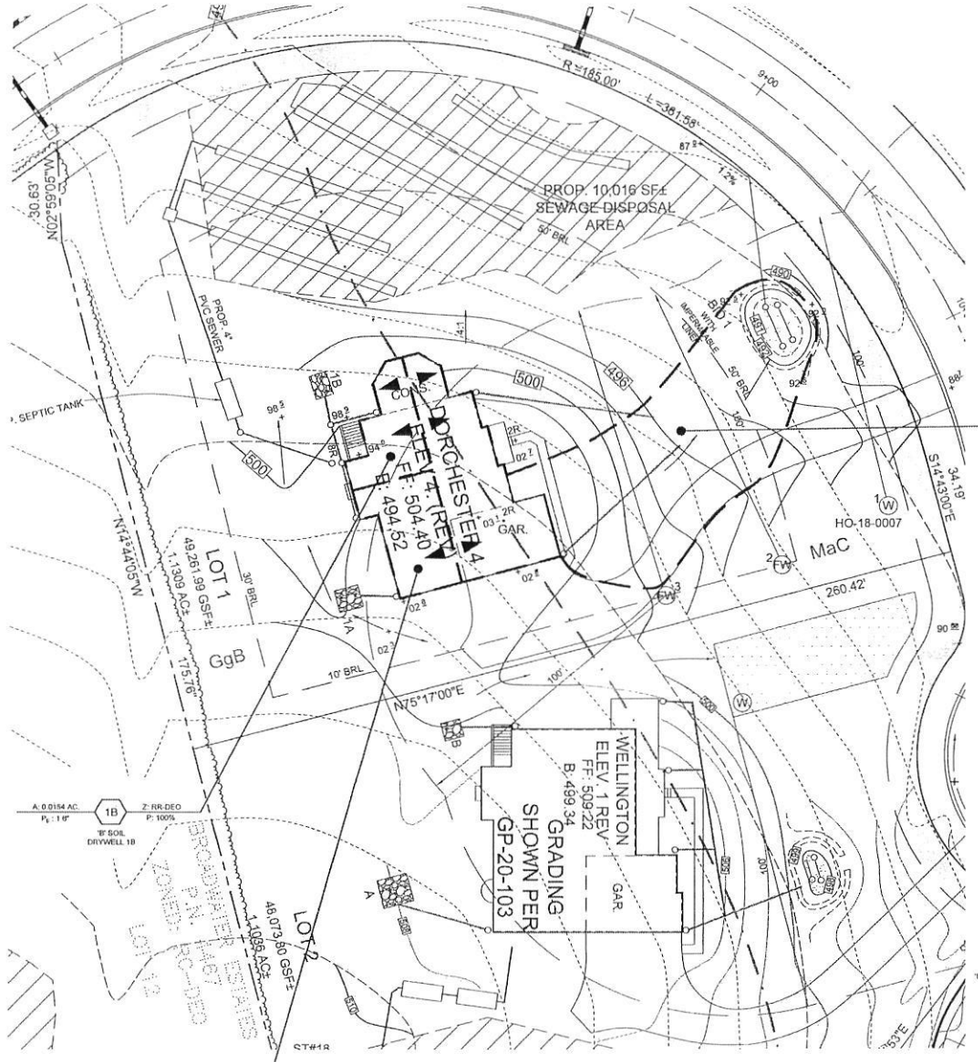
B-4-5 STANDARDS AND SPECIFICATIONS FOR PERMANENT STABILIZATION

DEFINITION
TO STABILIZE DISTURBED SOILS WITH PERMANENT VEGETATION

PURPOSE
TO TEST LONG-LIVED PERENNIAL GRASSES AND LEGUMES TO ESTABLISH PERMANENT GROUND COVER ON DISTURBED SOILS.

CONDITIONS WHERE PRACTICE APPLIES
EXPOSED SOILS WHERE GROUND COVER IS NEEDED FOR 6 MONTHS OR MORE.

CRITERIA
A. SEED MIXTURES
1. GENERAL USE
A. SELECT ONE OR MORE OF THE SPECIES OR MIXTURES LISTED IN TABLE B-3 FOR THE APPROPRIATE PLANT HARDINESS ZONE FROM B-5. SELECT SPECIES BASED ON THE SITE CONDITIONS AND PURPOSE FOUND ON TABLE B-2. ENTER SELECTED MIXTURE(S), APPLICATION RATES, AND SEEDING DATES IN THE APPROPRIATE SPACES ON THIS TABLE. A REQUIRING THE QUANTITY OF SEED AND TAGS MUST BE AVAILABLE UPON REQUEST TO THE INSPECTOR TO VERIFY TYPE OF SEED AND SEEDING RATE.
B. MULCH ALONE SHALL NOT BE USED FOR SEEDING DATES ONLY AS INDICATED BELOW. SEEDING DATES MAY BE EXTENDED IF THE GROUND IS FROZEN. THE APPROPRIATE SEEDING MIXTURE MUST BE APPLIED WHEN THE GROUND THAWS.
C. INOCULANTS: THE INOCULANT FOR TREATING LEGUME SEED IN THE SEED MIXTURES MUST BE A PURE CULTURE OF NITROGEN FIXING BACTERIA PREPARED SPECIFICALLY FOR THE SPECIES. INOCULANTS MUST NOT BE USED LATER THAN THE DATE INDICATED ON THE CONTAINER. ADD FRESH INOCULANTS AS DIRECTED IN THE PACKAGE. USE POUR TIMES THE RECOMMENDED RATE WHEN HYDROSEEDING. NOTE: IT IS VERY IMPORTANT TO KEEP INOCULANT AS COOL AS POSSIBLE UNTIL USED. TEMPERATURES ABOVE 70 TO 80 DEGREES FAHR


PROP. 10,016 SF±
SEWAGE DISPOSAL
AREA
PROP. 4" PVC SEWER
SEPTIC TANK
CONC. PORCHESTER 4
ELEV. 1 REV
FF: 504.40
B: 494.52
GAR.
WELLINGTON
ELEV. 1 REV
FF: 509.22
B: 499.34
GAR.
GRADING
SHOWN PER
GP-20-103
LOT 1
49,261.99 GSF±
1.1309 AC±
LOT 2
48,073.80 GSF±
1.1038 AC±
HO-18-0007
MaC
GgB
BIO 1
BIO 1A
BIO 1B
DRYWELL 1A
DRYWELL 1B
PROP. 10' WATER & SEWER EASEMENT
PROP. 30' ACCESS EASEMENT
PROP. 20' WATER & SEWER EASEMENT
PROP. 30' ACCESS EASEMENT